PRIFYSGOL BANGOR / BANGOR UNIVERSITY

RNA-Seq analysis of the guppy immune response against Gyrodactylus bullatarudis infection

Konczal, Mateusz ; Ellison, Amy; Phillips, Karl; Radwan, Jacek; Mohammed, Ryan; Cable, Jo; Chadzinska, Magdalena

Parasite Immunology

DOI:
10.1111/pim.12782

Published: 01/12/2020

Peer reviewed version

Cyswllt i'r cyhoeddiad / Link to publication

Dyfyniad o'r fersiwn a gyhoeddwyd / Citation for published version (APA):
Konczal, M., Ellison, A., Phillips, K., Radwan, J., Mohammed, R., Cable, J., & Chadzinska, M. (2020). RNA-Seq analysis of the guppy immune response against Gyrodactylus bullatarudis infection. *Parasite Immunology*, *42*(12), Article e12782. https://doi.org/10.1111/pim.12782

Hawliau Cyffredinol / General rights
Copyright and moral rights for the publications made accessible in the public portal are retained by the authors and/or other copyright owners and it is a condition of accessing publications that users recognise and abide by the legal requirements associated with these rights.

• Users may download and print one copy of any publication from the public portal for the purpose of private study or research.
• You may not further distribute the material or use it for any profit-making activity or commercial gain
• You may freely distribute the URL identifying the publication in the public portal ?

Take down policy
If you believe that this document breaches copyright please contact us providing details, and we will remove access to the work immediately and investigate your claim.

12. Oct. 2024

RNA-Seq analysis of the guppy immune response against *Gyrodactylus bullatarudis* infection

Running title: RNA-Seq of the guppy immune response

Mateusz Konczal[1*], Amy Ellison[2], Karl P. Phillips[1,3,4], Jacek Radwan[1], Ryan S. Mohammed[5], Joanne Cable[6] and Magdalena Chadzinska[7]

[1] Evolutionary Biology Group, Faculty of Biology, Adam Mickiewicz University, 61-614 Poznań, Poland

[2] School of Natural Sciences, Bangor University, Environment Centre Wales, Bangor, Gwynedd. LL57 2UW.

[3] School of Biological, Earth & Environmental Sciences, University College Cork, Cork, Ireland (present address)

[4] Marine Institute, Furnace, Newport, Co. Mayo, Ireland

[5] The University of the West Indies Zoology Museum, Department of Life Sciences, Faculty of Science and Technology, UWI, St. Augustine, Trinidad and Tobago, WI.

[6] School of Biosciences, Cardiff University, Cardiff, CF10 3AX, UK.

[7] Department of Evolutionary Immunology, Institute of Zoology and Biomedical Research, Jagiellonian University, 30-87, Kraków, Poland

Corresponding author. Email address: mateusz.konczal@amu.edu.pl

Disclosures: None.

Funding: This study was funded by the Polish National Science Centre Harmony Grant UMO-2013/10/M/NZ8/00253 (KP and JR), Fuga Grant UMO-2016/20/S/NZ8/00208 (MK) and by the KNOW RNA Research Centre in Poznan 01/KNOW2/2014 (JR).

Data availability statement: All sequence data are available at the NCBI Sequence Read Archive (Accession: PRJNA526802).

Author contribution: KPP and JR designed the experiment. KPP and RSM performed experiment and sampled fish. MK and JR organized RNA extraction and sequencing. MK and AE performed data analyses. MC, JR and JC interpreted data and discussed principle findings. JR, MC and MK wrote manuscript with contributions and edits from all authors. All authors read and approved the final manuscript.

Abstract

Gyrodactylids are ubiquitous ectoparasites of teleost fish, but our understanding of the host immune response against them is fragmentary. Here, we used RNA-Seq to investigate genes involved in the primary response to infection with *Gyrodactylus bullatarudis* on the skin of guppies, *Poecilia reticulata,* an important evolutionary model, but also one of the most common fish in the global ornamental trade. Analysis of differentially expressed genes identified several immune-related categories, including IL-17 signalling pathway and Th17 cell differentiation, cytokine-cytokine receptor interaction, chemokine signalling pathway, NOD-like receptor signalling pathway, natural killer cell-mediated cytotoxicity, and pathways involved in antigen recognition, processing and presentation. Components of both the innate and adaptive immune responses, play a role in response to gyrodactylid infection. Genes involved in IL-17/Th17 response were particularly enriched among differentially expressed genes, suggesting a significant role for this pathway in fish responses to ectoparasites. Our results revealed a sizable list of genes potentially involved in the teleost-gyrodactylid immune response. .

Keywords

Gyrodactylus, guppy, fish, transcriptome, RNA-Seq, Th17 response, immunity, ectoparasites

1. Introduction

Fish ectoparasites are an important selective agent in natural fish populations (1–4) and a major pest in commercial aquaculture (5). Monogenean worms of the genus *Gyrodactylus* cause skin and/or gill damage that can result in severe pathology and host death (6). This causes major problems in aquaculture and the ornamental fish trade (reviewed by Bakke et al. (7)). Gyrodactylids have also served as a model for host-parasite dynamics in ecological, evolutionary and epidemiological research, in laboratory, mesocosm and natural scenarios (1, 8–11).

Despite the commercial importance and research value of gyrodactylids, understanding of the associated host immune responses is fragmentary. Previously, Buchmann (12) demonstrated that the complement system in rainbow trout (*Oncorhynchus mykiss*) can have a lethal effect on *G. derjavini*. The results suggested that the response is mediated by binding of complement C3 factor to carbohydrate-rich structures of the parasite. In contrast, Zhou et al. (13) observed down-regulation of C3 and IFN-γ gene expression in the skin of infected goldfish (*Carassius auratus*). In the same studies, up-regulation of gene expression of pro-inflammatory cytokines IL-1β and TNF-α was detected. Similarly, in rainbow trout, primary infection with *G. derjavini* led to increased gene expression of pro-inflammatory mediators IL-1β (14), TNF-α, COX-2 and iNOS (15). These findings stress the importance of pro-inflammatory cytokines/innate immune response in the initiation of immune reactions against gyrodactylid infection.

Adaptive immunity also plays a role in the host response to gyrodactylids. Rainbow trout, for example, re-challenged with gyrodactylids showed a stronger response one month after full recovery from the primary infection compared to previously unchallenged fish (14). Furthermore, lower infection levels were observed within fish carrying a secondary infection, and, in these primed hosts, clearance began earlier compared to that seen in naïve fish, although no clear parasite-related changes in transcript levels were detected from two candidate markers of adaptive immune response (TCRβ and MHCIIβ) (14). Similarly, Cable and van Oosterhout (16) demonstrated that guppies (*Poecilia reticulata*) that have recovered from gyrodactylid infections possess a highly efficient acquired immunity that may minimize detrimental effects associated with subsequent gyrodactylid infections. In gene expression terms, increased expression of INFγ, Mx and CD8α and MHC I genes was detected in

Salmo salar (Baltic salmon from River Ume Älv in Sweden) resistant to *G. salaris* relative to a susceptible strain (East Atlantic salmon from River Skjernå in Denmark) (17).

In contrast, recent studies of goldfish immune responses against *G. kobayashii* showed no significant differences in parasite load and no changes in the transcript levels of genes involved in adaptive immunity, such as MHCIIβ and TCRβ1, between primary and secondary infection (13). Similarly, Jørgensen et al. (18), when studying genes encoding the inflammation-involved cytokines (IL-1β, TNF-α, IFN-γ, IL-10) and markers for adaptive immune response (CD4, CD8, TCRα, IgM, IgT and MHC II) in the skin of rainbow trout infected with *G. salaris*, did not find significant changes in expression. Moreover, no histological differences between infected and non-infected skin and fin tissue were detected, implying that infection did not cause skin infiltration with T- and B-cells and neutrophilic granulocytes.

Studies based on panels of candidate genes, though valuable, are likely to overlook important pathways. A more comprehensive approach is now offered by RNA-Seq, which allows large-scale screening of genes changing expression in response to infection without the limitations of using predefined probes (19, 20). Here, we used RNA-Seq to investigate the response of guppies (*Poecilia reticulata*) to infection with its common ectoparasite, *G. bullatarudis*. Guppies are tropical fish that, owing to their high natural polymorphism, rapid generation time and amenability to lab rearing have long served as a model species in behavioural and evolutionary biology (21–23). Guppy research has included numerous studies of host-parasite coevolution (1, 10, 24, 25), which have investigated the widespread and common gyrodactylid infections in both wild and ornamental guppies. Both innate and adaptive immune responses have been inferred as playing roles in guppy response to G*yrodactylus* infection (24) but this is the first RNA-Seq-based screening of the immune response to gyrodactylids in any fish species.

2. Materials and methods

2.1. Host maintenance

To obtain fish naïve with respect to exposure to species of *Gyrodactylus,* 38 pregnant guppy females were collected from a tributary of the Bacolet River near Scarborough Health Centre on Tobago in March 2016 (‘HC’ population henceforth).

Guppies were transported to our field station and screened for gyrodactylids. Screening involved briefly anaesthetising fish in 0.02% tricaine methane sulfonate (MS-222, Sigma-Aldrich) and examining them under a dissecting microscope (as detailed by Schelkle et al. (26)). After observing gyrodactylids among the sample of fish, we treated all fish with 20 ‰ sodium chloride solution for 1 minute (27). This treatment was deemed effective for this fish population after observing no gyrodactylids when re-screening all fish 1, 3 and 5 days post treatment. Fish were then reared for 3.5 months in a 100 litre aquarium, with a daily feed of either *Artemia* nauplii or generic fish flakes. Because guppies are cannibalistic, plastic grids excluding access of adult fish to ca. 1/3 of the aquarium were used to enhance fry survival. The adult and subadult offspring of these females were used for the gene expression analyses described below.

Fish sampling and maintenance were conducted according to national guidelines and with the permission from the Tobago House of Assembly (permission number: 004/2014).

2.2. Gyrodactylus worm isolation, characterization and culture

Adult wild guppies from the Roxborough River, Tobago, were collected and screened for gyrodactylids in June 2016. Infected fish were separated and served as donors. As infection intensities among the infected fish were low (1-3 parasites per fish), worms were cultured to obtain sufficient numbers for the experiments (see Stewart et al. (28)). In brief, to establish cultures, a donor fish and a gyrodactylid-naïve recipient ‘farm’ fish were anaesthetised and 1-2 worms were allowed to move from donor to recipient. The farm fish were from a mesocosm population at our field station, which was founded in November 2014 by crossing gyrodactylid-free male guppies from a Trinidad population with gyrodactylid-free females from a Tobago population (different populations from those used in the present study) and which were maintained free of exposure to gyrodactylids. These cultures also provided us with a quick means of assessing whether we had collected *G. bullatarudis* rather than *G. turnbulli*, which is also widespread in Trinidad and Tobago guppies. *G. bullatarudis* infections show a pronounced rostral bias with worms aggregated on the head, opercula and pectoral fins of the host (29). Species identification was later confirmed by mtDNA COII sequencing: we extracted DNA from 4 worms, and Sanger-sequenced a 262 bp section (primers and PCR conditions as in Xavier et al. (30)).

BLAST searches of the resulting sequences showed their strongest matches (97-100% identity) to published *G. bullatarudis.*

2.3. Infection model

For experimental infections, we selected at random 28 adult and juvenile fish (>10 mm) from our captive gyrodactylid-naïve HC population. Twenty-one fish were infected in July 2016 using the controlled infection procedure described above; the remaining seven were handled in the same manner but not exposed to parasites, to serve as uninfected controls. A single donor fish was used to initiate all infections on the same day. Each recipient received two gyrodactylids; any additional worms that accidently transferred were removed using watchmaker's forceps. Recipients were then revived and housed individually in 400 ml isolation containers at ambient shade temperature (mean = 27.1°C; mean daily min. = 25.9°C; mean daily max. = 28.4°C), receiving feed followed by a water change every other day. Control fish were kept under the same isolation conditions. Fish were anesthetised for worm counting two days post-infection.

All national guidelines for the care and use of animals were followed. Procedures and protocols were conducted under UK Home Office license (PPL 302876) with approval by the Cardiff University Animal Ethics Committee.

2.4. Skin sampling

Four days post-infection, we screened all fish again and selected eight infected fish to euthanize (Tricaine Methanesulfonate [MS-222, 500 mg L^{-1}] overdose) for tissue sample collection, along with three uninfected control fish. To choose which infected fish to sample, we ranked infections by intensity and then made random selections within blocks of fish with similar intensities. Our aim was to have representation from a range of infection intensities while still leaving sufficient fish from across the susceptibility range to progress in their infections. We repeated this at infection day 8, euthanizing seven infected fish and two control fish. At infection day 12, we ended the experiment by euthanizing all remaining fish for tissue sampling. All fish were euthanized with an overdose of MS-222 (500 mg L^{-1}). From each fish, we collected two tissue samples: 1) caudal fin and pectoral fins, being sure to take only skin and fin ray, and no muscle or scales; and 2) head skin, usually

collected by inserting forceps at the base of the cranium and 'peeling' forward, taking the lips and gill opercula. Due to the small sizes of the fish, contamination of the head skin sample with muscle tissue, gill fragments and scales could not be completely avoided. Between each euthanized fish, tools and the work station were cleaned with RNaseZap (Sigma-Aldrich). Each tissue sample was placed in 1 ml RNAlater in a 1.5 ml RNAse-free Eppendorf tube. Samples were refrigerated (+4°C) for one week and then frozen at -20°C.

2.5. RNA sequencing and expression analyses

RNA from fins and head skin was extracted with RNAzol (Sigma-Aldrich), followed by quality control assessment on a Tape Station. We used the 19 samples with the highest RNA Integrity Numbers for library preparation and sequencing (Table 1 for sample overview). A poly-A stranded library was prepared from each sample at the CRG Barcelona Genomic Unit and sequenced to generate 50bp single-end reads using the Illumina 2500 platform. All sequence data have been submitted to the NCBI Sequence Read Archive (Accession: PRJNA526802).

Read quality was assessed with FASTQC, and low quality reads were filtered with Trimmomatic, version 0.35, (31) with the following settings: ILLUMINACLIP:TruSeq3-SE:2:30:10,LEADING:3,TRAILING:3, SLIDINGWINDOW:4:15, and MINLEN:36. Cleaned reads were mapped to the guppy reference genome, version GCF_000633615.1, (32) with STAR software, version 2.5.3a and default parameters (33).

2.6. Differential Gene Expression (DGE) Analysis

Gene expression analyses were performed following the Bioconductor RNA-Seq workflow (34). Briefly, we downloaded the guppy genome annotation from NCBI and used it for defining gene models. After counting the numbers of reads mapped to the gene models, we used DESeq2 library (35) to create *DESeqDataSet* object, and included only genes with at least 10 reads mapped to the gene model. Transformed counts (rlog) were used for calculating sample distances, visualising samples with heatmaps, and principal component analyses (PCA). Because heat map visualisation suggested that gene expression profiles grouped by body location (head vs fins) but not by day of sampling (Supplementary Figure S1), we decided to analyse each tissue separately to determine infection-related changes in gene expression (head

infected vs head non-infected and fins infected vs fins non-infected). Equivalent analyses performed separately for days 4 and 8 (not reported) showed similar patterns but with fewer infection-related genes identified, likely due to smaller numbers of samples per group. To confirm our findings, we used another software, edgeR, to analyse gene expression (36). We then compared p–values estimated with DESeq2 and edgeR for fin samples.

To assign genes to molecular pathways, we used the Kyoto Encyclopedia of Genes and Genomes (KEGG) Automatic Annotation Server. KEGG Orthology assignments were then used to search and colour pathways in the KEGG database. All protein coding genes were blasted against Swiss-Prot databases, and Gene Ontology (GO) terms were annotated with blast2GO (37) and interproscan (38). GO terms predicted by both software were merged and used for enrichment tests, calculated using the topGO package in R and summarized with REViGO (39).

2.7. Weighted Gene Co-expression Network Analyses

Differential gene expression is usually identified using exact tests carried out on each gene separately; however, due to the need of correcting P-values with stringent multiple testing methods, only genes with the largest differences in expression are typically identified. An alternative for quantifying transcriptional responses is weighted gene co-expression network analysis (WGCNA) which can reveal more subtle but biologically-relevant systematic changes in expression (40). We used this method to quantify transcriptional responses of fish to infection, enabling the identification of networks (modules) of co-expressed genes (genes that show consistent expression profiles across samples), and thus potentially identifying functionally important genes with only subtle changes in expression that may otherwise not have been detected. Read counts, normalized using a variance stabilizing transformation (VST) in DESeq2, were analysed using the R package WGCNA. Our gene modules were defined using the dynamic Cut Tree function and TOM Type “signed” with a minimum module size of 100. A module eigengene distance threshold of 0.25 was used to merge highly similar modules. Gene module preservation (by tissue or sample day) was determined using Z-summary statistics in the WGCNA package (40). Modules were then correlated with tissue type or sampling day, plus infection status and worm burden, to identify gene networks significantly associated with factors of interest.

Biological Process GO term enrichment tests of each significant gene module were performed using topGO as described above.

3. Results

Differential expression analyses

We obtained a total of 19 samples from head skin (10) and fins samples (9) taken from control (9 samples) and infected fish (10 samples). Among fish that were infected, there was no significant bias in age class (juvenile or female) against day of killing (4, 8 or 12; $\chi^2 = 2.48$, bootstrap P = 0.39). Across all fish, including those not infected, there was no significant effect of day of killing on size (Kruskal-Wallis test: $\chi^2 = 1.28$, df = 2, P = 0.53). There was no significant size difference between infected and uninfected fish (Mann-Whitney test: U = 22, P = 0.82), and there was no significant age/sex bias among infected v. uninfected fish (Fisher's exact test: P = 0.23).

Comparison of transcriptomic profiles revealed that samples clustered by tissue, (Figure 1), and therefore head skin and fin samples were analysed separately. We found very few differentially expressed genes in head skin samples (n = 8; Supplementary Table S1), possibly a consequence of higher heterogeneity of tissues collected during sampling (skin, scales, muscle tissue) compared to fins. However, in the fin tissue we found 342 differentially expressed genes (P-values adjusted for false discovery rate = 0.1, Supplementary Table S2). Results were the same, regardless of the software used (Supplementary Figure S2, S3). Gene ontology analysis of these genes revealed enrichment for multiple terms (Supplementary Figures S4-S6), including immune function (in 'biological processes' category) and cytokine/chemokine (in 'molecular function' category). Metabolic pathway analysis (KEGG) of differentially expressed genes identified orthologues of several immune-related categories, including cytokine-cytokine receptor interactions (14 genes), IL-17 signalling pathway (9) and Th17 cell differentiation (4), chemokine signalling pathway (7), NOD-like receptor signalling pathway (6), natural killer cell-mediated cytotoxicity (4), T cell receptor signalling pathway (3), and B cell receptor signalling pathway (3) (see Supplementary File S1 for full list). More detailed analysis of the cytokine-cytokine receptor interaction category revealed several genes with significantly increased expression in infected fish belonging to CXC and CC chemokine

subfamilies, IL3RB family, TNF family and IL17 family (Figure 2). The last family was particularly well represented, with 6/14 genes showing higher expression in infected fish compared to uninfected ones (Figure 3). Most of these genes were upregulated in infected fish (Figure 4).

Expression of immune-related genes

Follow-up examination of the list of differentially expressed genes (Supplementary Tables S1 and S2) revealed upregulation in fins of several genes involved in the innate immune response, including: i) receptor for pathogen recognition, ii) molecules directing leukocyte migration, as well as iii) enzymes catalyzing eicosanoid synthesis in arachidonic acid cascade. From the first category, we found upregulation of gene expression of C-type mannose receptor 2 and macrophage mannose receptor 1, as well as NOD-like receptors (NLRs NLRP12 (NACHT, LRR and PYD domains-containing protein 12) and NLRP3, NLRC3/NOD3 (NOD-like receptor family CARD domain containing 3) and NOD1 (nucleotide-binding oligomerization domain-containing protein 1). From the second category, we found up regulation of arachidonate 15-lipoxygenase B-like (ALOX15B) and ALOX 12 gene expression.

Among molecules involved in leukocyte migration, we observed upregulation of gene expression of several chemokines (CXCL1/growth-regulated alpha protein, CXCL13/B cell-attracting chemokine 1, CCL2/monocyte chemoattractant protein 1b, CCL20/macrophage inflammatory protein-3) and chemokine receptors (CCR1, CCR2, CXCR1), permeability factor 2-like and receptor for C3a complement factor (chemokine-like receptor 1). Furthermore, upon infection in fin skin we detected up regulation of lipocalin-2, cathepsin B and matrix metalloproteinase 13/collagenase 3. In the fins of infected fish, we found increased gene expression of several cytokine receptors: interferon-α/β receptor - IFNAR, interleukin-1 receptor 1 - IL-1R1, IL-13R subunit alpha-1, IL-21R, IL-31R subunit alpha, TNFR superfamily member 1A and 4, as well as cytokine receptor common subunit gamma which is common to the receptor complexes for interleukin receptors such as IL-2, IL-4, IL-7, IL-9, IL-15 and IL-21.

Several genes involved in the adaptive immune response were upregulated in fins. This included two transcription factors implicated in Th1 (STAT4) and Th2 (GATA3) differentiation, and adhesion molecules such as cadherin-like protein 26,

cell surface glycoprotein CD9 and expressed on T cells and NK cells adhesion molecule CD2. We also found upregulation of glycosylphosphatidylinositol (GPI)-linked differentiation antigen (lymphocytes antigen 6G, Ly6G) that in mammals is expressed by myeloid-derived cells and T-cell surface glycoprotein CD4-like usually expressed on T helper cells, monocytes, macrophages, and dendritic cells.

Finally, during infection we observed elevated expression of genes involved in ubiquitination and antigen processing (E3 ubiquitin/ISG15 ligase TRIM25, TRIM21, TRIM8, E3 ubiquitin-protein ligase Itchy, RNF19A, SMURF2 and proteasome activator complex subunit 4 as well as ubiquitin carboxyl-terminal hydrolase 11, 12, 19) and antigen presentation (beta-2-microglobulin, MHC class I related protein).

We did not find a significant difference in expression of MHC class II, which has been inferred as influencing the effectiveness of the guppy immune response to gyrodactylids (1, 41). However, we noted its high constitutive expression (e.g. LOC103461570, predicted: DRB1-8 beta chain-like, mean =2959.7 reads, Log2FC=-0.26; LOC103460899, predicted: E-S beta chain-like, mean =5675,97, log2FC=-0,03) compared to the mean (565.1) for 514 genes expressed in our sample which fell into the immune function category.

Gene co-expression network analyses

Gene co-expression network analyses revealed 33 and 25 modules in the head and fins respectively. Six head gene modules were significantly correlated with either infection status or worm burden, of which five were significantly preserved in fin tissues (Table 2). This result highlights the power of WGCNA analysis compared to standard DGE analysis, where only a handful of differentially expressed genes were found in the head tissue (in contrast to fins, see above). One of the modules in the head tissues (“head-violet”; Table 2) was negatively correlated with infection status (i.e. lower expression in infected fish) and enriched for several GO terms including mucus secretion. The head gene module (“head-cyan”) positively associated with infection status (higher expression in infected fish) was enriched for GO terms including type I interferon production. Furthermore, all 3 head gene modules (“head-red”, “head-darkred” and “head-pink”) positively correlated with worm burden (increasing expression with higher worm number) were enriched for genes involved in T-cell differentiation and proliferation, as well as antigen processing and presentation (head-red; “regulation of T-cell apoptosis and formation of

immunological synapse", head-darkred; "regulation of T-cell differentiation" and "antigen processing and presentation", head-pink; "T-cell proliferation") (Table 2). The gene module ("head-brown") negatively correlated with worm burden (lower expression in more heavily infected fish) included functions related to MHC II and IL-1β biosynthesis (Table 2).

In contrast to head gene networks, only a single gene module defined in the fins was significantly associated with infection status ("fin-black") and preserved in head tissue (Table 2). This module included functions related to innate immune response such as macrophage activation and production and secretion of pro-inflammatory cytokines (TNF, IL-6) and chemokine CCL2. In addition, a single fin gene module ("fin-cyan") was positively correlated with worm burden, not preserved in the head, enriched for GO terms including regulation of macrophage chemotaxis and pathogen-recognition (Toll signalling) (Table 2).

In both tissue networks, we found several gene modules associated with sampling day (head; 6, fins; 3), suggesting temporal variation in infection responses. Therefore, we re-defined gene modules including both tissue types, separating data instead by sampling day. At day 4, of the 28 gene modules found, four associated with infection status and/or worm burden yet were not preserved by day 8 (Supplementary Table S3). At day 8, nine gene modules were significantly associated with either infection status or worm burden, of which only two were significantly preserved in day 4 (Supplementary Table S3). All time-specific modules were enriched for immune response GO terms, particularly for T cell and other leukocyte-related pathways.

4. Discussion

Previous studies based on panels of candidate genes have suggested that the fish immune response against gyrodactylids involved C3 complement factor (12), pro-inflammatory cytokines (13–15) as well as some elements of Tc-mediated reaction (17). In the present study, use of RNA-Seq has allowed us to identify many other genes not previously identified as being part of fish immune responses against gyrodactylid infection. These include genes and gene families with known links to the immune systems of other vertebrates.

Resolution of inflammation and wound healing

The most significant upregulated gene (most significant *P*-value for both head and fin tissue and largest absolute fold-change value in the fin; Supplementary Tables S1-S2) was 15-lipoxygenase-2 (ALOX15B). In fins, we also found increased expression of the related arachidonate 12-lipoxygenase (ALOX12). Both enzymes catalyze synthesis of lipoxin A4 (LXA4) from leukotriene A4 (LTA4) and may also convert arachidonic acid to 15-hydroxyeicosatetraenoic acid (15SHETE), which can, in turn, be converted into LXA4 by ALOX5 (42). In mammals, LXA4 has been ascribed an anti-inflammatory function, inhibiting leukocyte-mediated injury, stimulating macrophage clearance of apoptotic neutrophils, and inhibiting pro-inflammatory cytokine production and cell proliferation (43, 44). In fish, however, information about the roles of ALOX and lipoxins in the immune response are limited.

First described in rainbow trout, LXA4 was found to be synthesized in trout macrophages when stimulated *in vitro* with either calcium ionophore or opsonized zymosan (45). Knight and Rowley (46) tested the effect of LXA4 on the number of plaque-forming cells (PFC) following *in vitro* challenge of trout splenocytes with sheep erythrocytes and found that LXA4 caused a significant dose-dependent increase in PFC generation. In contrast, however, *in vivo* fin amputation in zebrafish embryos decreased expression of ALOX12 and ALOX15b genes and LXA4 concentration (42). Thus, while mammalian data suggest that upregulation of ALOX12 and 15B may indicate their role in preventing inflammation-induced tissue damage, the present study suggests a similar role of these genes in fish. Increased expression of genes involved in wound healing, establishment of skin barrier and keratinocyte proliferation is also supported by increased expression of cathepsin B, which enhances the activity of other proteases, including matrix metalloproteinase, as well as matrix metalloproteinase 13/collagenase, which can be involved in matrix remodelling events by collagen degradation and therefore associated with wound healing response. Similarly, Braden et al. (47) observed elevated expression of tissue repair enzymes (MMP9, MMP13) in the skin of salmonids infected with the ectoparasitic copepod *Lepeophtheirus salmonis*.

Th17-driven and innate immune response

Our special interest was drawn to the *G. bullatarudis*-induced changes in the expression of a number of genes involved in the Th17 response in the skin of

infected fish. Although we did not find upregulation of the IL-17 gene itself, two types of IL-17 receptors (A and C), IL-17-induced transcription factors, and cytokines/chemokines involved in Th17 differentiation and action, were all upregulated (Fig. 1B). Also of relevance to the Th17 response was the upregulation of CD4 glycoprotein. Previously, Infante-Duarte et al. (2000) observed that CD4+T cells, primed with a synthetic peptide in the presence of spirochete bacteria, may differentiate into distinct T-cell lineage expressing high level of IL-17A (48, 49). To date, six mammalian IL-17-family ligands (IL-17A, IL-17B, IL-17C, IL-17D, IL-17E (IL-25) and IL-17F) and five receptors (IL-17RA, IL-17RB/IL-25R, IL-17RC, IL-17RD/SEF and IL-17RE) have been identified (50). In mammals, these are thought to mediate immunity against extracellular bacteria, particularly those that colonize exposed surfaces such as the airways, skin, and intestinal lumen. Th17 is also involved in T cell polarization in response to infection by extracellular and intracellular bacteria and fungi (51).

Genes related to known IL-17 family members and IL-17 receptors have been identified in other teleosts (52, 53). IL-17 homologues, for example, have been found in the genomes of zebra fish (*Danio rerio*), fugu (*Takifugu* spp.), grass carp and salmonids (54–61), while five IL-17Rs were found in the large yellow croaker (*Larimichthy scrocea*) (53). These receptors are constitutively expressed in several tissues and organs, including high constitutive expression in mucosal tissues of the gills and skin (54, 62, 63). Moreover, gill mucosal tissue, along with the lymphoid organs of the head kidney and spleen, showed upregulation of IL-17 receptors in *L. crocea* infected with *Aeromonas hydrophila* (see Ding et al. (53)), in line with our observation of increased IL-17 receptor expression in the skin of infected guppies.

Upon infection differential expression of genes involved cytokine-cytokine receptor interactions and chemokine signalling pathway was observed. Among others, we found infection-induced changes in the expression of cytokine receptors IL-1, IL-21 and TNF, which, in mammals, are believed to be both drivers of Th17 differentiation and release of cytokines from activated Th17 cells (64–67). Previous work on teleosts has shown that IL-21 is a potent stimulator for IL-17A/F1a (68), in line with the increased expression of genes involved Th17 response we found in response to *G. bullatarudis* infection. Moreover, in the fins of *G. bullatarudis*-infected guppies, several IL-17-inducible genes were upregulated (chemokines: CXCL1,CXCL8 and CXCL13, CCL2 and 20, and MMP-13/collagenase 3). This

finding also has parallels in mammals, where both homo- and heterodimers of IL-17A and IL-17F induced the expression of pro-inflammatory mediators (e.g. IL-1b, IL-6, GM-CSF, CXCL8, CXCL1, CXCL10 and MMP-13) and, accordingly, mobilize, recruit, and activate neutrophils (49). Our results may imply that members of the IL-17 family also function as potent pro-inflammatory modulators in fish. This interpretation is supported by *in vitro* work in fish: recombinant carp IL-17D upregulated expression of pro-inflammatory IL-1b, TNF-a and CXCL-8 and activated NF-KB signalling (63), and, similarly, trout recombinant IL-17A increased the expression of pro-inflammatory IL-6, CXCL8 and the antimicrobial peptide BD-3 (54). Furthermore, in mammals also IL-23 induces a polarization of Th17 cell population with a unique inflammatory gene signature that includes IL17, IL6, TNF, CCL20, CCL22, IL1R1, and IL23R (69). Recently, Yin and co-workers (70) confirmed also for fish that recombinant IL-23 is able to enhance the mRNA levels of IL-17A/F1 and its secretion from head kidney leukocytes. Interestingly, our WGCN analysis indicated existence of the positive correlation between worm burden and expression of genes involved in inflammation and Th17-response such as IL-23 in the samples from head skin of guppies.

Previous research has already indicated a role of Th17 in fish immune response and found increased expression of IL-17 genes during viral, bacterial and myxozoan (*Tetracapsuloides bryo salmonae and Enteromyxum leei)* infections (54, 63, 71–73). Enhanced Th17-like immune responses was also found in mucosal and adipose tissue of vaccinated fish (59, 60, 74) and it was involved in vaccine-induced granulomatous reactions (58). Moreover, IL-17 up-regulation was observed in fish leukocytes stimulated in vitro with LPS, poly I:C, PHA and ConA (61, 75). IL-17A was also increased in the head kidney of carp infected with some, but not all, species of *Trypanoplasma* (also known as *Cryptobia*) parasites (76). Our study is the first indication of Th17 involvement in the fish immune response against gyrodactylid ectoparasites.

In fin tissue, we found upregulation of several genes involved in pathogen recognition, such as C-type mannose receptor 2, macrophage mannose receptor 1, and a number of NOD-like receptors. These observations agree with Hu et al. (77), they described involvement of a NOD-like receptor signalling pathway in the skin of orange-spotted grouper (*Epinephelus coioides*) infected with the holotrich protozoan *Cryptocaryon irritans*. Moreover, in WGCN analysis we found that expression of the genes involved in Toll-signalling correlates in fin samples with worm burden. Finally,

upon infection in fin skin, we noted upregulation of lipocalin-2. Lipocalin (neutrophil gelatinase-associated lipocalin, NGAL) is involved in iron sequestrating which in turn limits infection. These results support the suggestion that innate immunity plays an important role in the response to gyrodactylid skin parasites, supporting and is in corroboration of the fact that Th17 immune response drives neutrophil infiltration to the site of infection (78, 79).

Adaptive immune response

In addition, molecules associated with antigen presentation and adaptive immune response were significantly upregulated upon infection. This list includes T and B cell markers (CD4 mentioned before, but also CD2 – both markers of Th cells including Th17, CD9, CD22), genes involved in ubiquitination and antigen processing and presentation (e.g. TRIMs, beta-2-microglobulin, MHC I). Moreover, we found a positive correlation between worm burden and expression of genes involved in antigen processing and presentation (e.g. formation of immunological synapse) and T-cell differentiation, proliferation and apoptosis. These data suggest that lymphocytes infiltrate the infected skin. Similarly, T cell marker tetraspanin CD9, B cell receptor CD22, and MHC class I and class II genes were also significantly upregulated in skin of orange-spotted grouper infected with *C. irritans* (see (77)).

Previous studies found associations between the level of infection with *Gyrodactylus* and guppy MHC II, both in the field (41) and in controlled experimental infection (1). Here, although MHC class I genes were significantly upregulated in differential expression analyses (Supplementary Table S1), we did not find significantly increased expression of MHC II genes in the skin of infected fish. However, constitutive expression of MHC II gene in skin of uninfected fish was roughly an order of magnitude higher compared to all other immunity genes, and the lack of differential expression in infected skin is therefore not inconsistent with the role of MHC II in mediating immune response against *Gyrodactylus*. MHC II expression on the surface of antigen presenting cells (in particular dentritic cells) is regulated by ubiqutination (80, 81), and we did find significant changes in expression of several genes involved in ubiquitation and deubiquitation. Finally, we found a gene co-expression module negatively correlated with worm burden and enriched for MHC II biosynthesis, suggesting fish with increased activation of MHC II pathways are more resistant to infection.

When defining gene co-expression modules by sampling day (rather than tissue), we found several time-specific gene modules enriched for immune responses, particularly for leukocyte-related pathways, associated with infection status and/or worm burden (Supplementary Table S3). This indicates a broad shift in the immune expression response throughout the course of infection. The greater number of adaptive immune-enriched modules specific to day 8 is consistent with typical guppy-*Gyrodactylus* infection profiles; where worm clearance is usually observed over a week into infection and assumed to be associated with initiation of adaptive immunity (24). However, our sample sizes restricted our ability to interrogate temporal co-expression patterns in each tissue separately. Future work on tissue-specific temporal variation in activation of immune gene expression is required to fully resolve the critical timings of infection responses.

Conclusions

Summarizing, our RNA-seq screen of gene expression changes following *G. bullatarudis* infection in guppies resulted in a sizeable list of genes potentially involved in the teleost immune response. Our results are consistent with earlier studies of limited sets of candidate genes in implying the role of both innate and adaptive responses to infection with gyrodactylids. However, many immune-related genes we found differentially expressed in infected and uninfected fish have not been studied before in such context. Of these new genes, those involved in the Th17 response were particularly well represented, highlighting Th17 pathway as a strong candidate for further study of immune response to infection with fish ectoparasites.

Acknowledgements

We thank staff of the Environmental Research Institute Charlotteville (ERIC), Tobago, for support in the field; P. Turpin for renting us the field station, Jaroslaw Raubic for RNA extraction and Jochen Hecht for valuable comments on sequencing. This study was funded by the Polish National Science Centre Harmony Grant UMO-2013/10/M/NZ8/00253 (KP and JR), Fuga Grant UMO-2016/20/S/NZ8/00208 (MK) and by the KNOW RNA Research Centre in Poznan 01/KNOW2/2014 (JR). JC and AE were supported by the Welsh Government and Higher Education Funding Council for Wales through the SêrCymru National Research Network for Low Carbon, Energy and the Environment (NRN-LCEE) AquaWales project and AE was supported by the

BBSRC Future Leader Fellowship [BB/R010609/1]. KPP is supported by Science Foundation Ireland. Computations were performed at the Poznan Supercomputing and Networking Center.

Ethics approval

The project was conducted with the permission from the Tobago House of Assembly (permission number: 004/2014). All national guidelines for the care and use of animals were followed. Procedures and protocols were conducted under UK Home Office license (PPL 302876) with approval by the Cardiff University Animal Ethics Committee.

References

1. Phillips KP, Cable J, Mohammed RS, Herdegen-Radwan M, Raubic J, Przesmycka KJ, Van Oosterhout C, Radwan J. 2018. Immunogenetic novelty confers a selective advantage in host–pathogen coevolution. Proc Natl Acad Sci U S A 115:1552–1557.

2. El Nagar A, Maccoll ADC. 2016. Parasites contribute to ecologically dependent postmating isolation in the adaptive radiation of three-spined stickleback. Proc R Soc B Biol Sci 283.

3. Eizaguirre C, Lenz TL, Kalbe M, Milinski M. 2012. Divergent selection on locally adapted major histocompatibility complex immune genes experimentally proven in the field. Ecol Lett 15:723–731.

4. Johnsen BO, Jenser AJ. 1991. The Gyrodactylus story in Norway. Aquaculture 98:289–302.

5. Johnson SC, Treasurer JW, Bravo S, Nagasawa K, Kabata Z. 2004. A review of the impact of parasitic copepods on marine aquaculture, p. 229–243. *In* Zoological Studies.

6. Cone DK, Odense PH. 1984. Pathology of five species of *Gyrodactylus* Nordmann, 1832 (*Monogenea*). Can J Zool.

7. Bakke TA, Cable J, Harris PD. 2007. The Biology of Gyrodactylid Monogeneans: The “Russian-Doll Killers.” Adv Parasitol 64:167–376.

8. Kukekova A V, Johnson JL, Teiling C, Li L, Oskina IN, Kharlamova A V, Gulevich RG, Padte R, Dubreuil MM, Vladimirova A V, Shepeleva D V, Shikhevich SG, Sun Q, Ponnala L, Temnykh S V, Trut LN, Acland GM. 2011. Sequence comparison of prefrontal cortical brain transcriptome from a tame and an aggressive silver fox (*Vulpes vulpes*). BMC Genomics 12:482.

9. Raeymaekers JAM, Wegner KM, Huyse T, Volckaert FAM. 2011. Infection dynamics of the monogenean parasite *Gyrodactylus gasterostei* on sympatric

and allopatric populations of the three-spined stickleback *Gasterosteus aculeatus*. Folia Parasitol (Praha) 58:27–34.

10. Dargent F, Scott ME, Hendry AP, Fussmann GF. 2013. Experimental elimination of parasites in nature leads to the evolution of increased resistance in hosts. Proc R Soc B Biol Sci 280:20132371.

11. Brunner FS, Anaya-Rojas JM, Matthews B, Eizaguirre C. 2017. Experimental evidence that parasites drive eco-evolutionary feedbacks. Proc Natl Acad Sci 114:3678–3683.

12. Buchmann K. 1998. Binding and lethal effect of complement from *Oncorhynchus mykiss* on *Gyrodactylus derjavini* (Platyhelminthes: Monogenea). Dis Aquat Organ 32:195–200.

13. Zhou S, Li WX, Zou H, Zhang J, Wu SG, Li M, Wang GT. 2018. Expression analysis of immune genes in goldfish (*Carassius auratus*) infected with the monogenean parasite *Gyrodactylus kobayashii*. Fish Shellfish Immunol 77:40–45.

14. Lindenstrøm T, Buchmann K, Secombes CJ. 2003. Gyrodactylus derjavini infection elicits IL-1β expression in rainbow trout skin. Fish Shellfish Immunol.

15. Lindenstrøm T, Secombes CJ, Buchmann K. 2004. Expression of immune response genes in rainbow trout skin induced by *Gyrodactylus derjavini* infections. Vet Immunol Immunopathol 97:137–148.

16. Cable J, Van Oosterhout C. 2007. The role of innate and acquired resistance in two natural populations of guppies (*Poecilia reticulata*) infected with the ectoparasite *Gyrodactylus turnbulli*. Biol J Linn Soc 90:647–655.

17. Kania P, Larsen TB, Ingerslev HC, Buchmann K. 2007. Baltic salmon activates immune relevant genes in fin tissue when responding to *Gyrodactylus salaris* infection. Dis Aquat Organ 76:81–85.

18. JØrgensen TR, Raida MK, Kania PW, Buchmann K. 2009. Response of rainbow trout (*Oncorhynchus mykiss*) in skin and fin tissue during infection with a variant of *Gyrodactylus salaries* (*Monogenea: Gyrodactylidae*). Folia Parasitol (Praha) 56:251–258.

19. Hegedus Z, Zakrzewska A, Ágoston VC, Ordas A, Rácz P, Mink M, Spaink HP, Meijer AH. 2009. Deep sequencing of the zebrafish transcriptome response to mycobacterium infection. Mol Immunol 46:2918–2930.

20. Li C, Zhang Y, Wang R, Lu J, Nandi S, Mohanty S, Terhune J, Liu Z, Peatman E. 2012. RNA-seq analysis of mucosal immune responses reveals signatures of intestinal barrier disruption and pathogen entry following *Edwardsiella ictaluri* infection in channel catfish, Ictalurus punctatus. Fish Shellfish Immunol 32:816–827.

21. Endler JA. 1980. Natural Selection on Color Patterns in Poecilia reticulata. Evolution (N Y).

22. Reznick DN, Ghalambor CK, Crooks K. 2008. Experimental studies of evolution

in guppies: A model for understanding the evolutionary consequences of predator removal in natural communities. Mol Ecol 17:97–107.

23. Bloch NI, Corral-López A, Buechel SD, Kotrschal A, Kolm N, Mank JE. 2018. Early neurogenomic response associated with variation in guppy female mate preference. Nat Ecol Evol 2:1772–1781.

24. Cable J, van Oosterhout C. 2007. The impact of parasites on the life history evolution of guppies (*Poecilia reticulata*): The effects of host size on parasite virulence. Int J Parasitol 37:1449–1458.

25. Reynolds M, Arapi EA, Cable J. 2018. Parasite-mediated host behavioural modifications: *Gyrodactylus turnbulli* infected Trinidadian guppies increase contact rates with uninfected conspecifics. Parasitology 145:920–926.

26. Schelkle B, Shinn AP, Peeler E, Cable J. 2009. Treatment of gyrodactylid infections in fish. Dis Aquat Organ.

27. Schelkle B, Doetjes R, Cable J. 2011. The salt myth revealed: Treatment of gyrodactylid infections on ornamental guppies, *Poecilia reticulata*. Aquaculture 311:74–79.

28. Stewart A, Jackson J, Barber I, Eizaguirre C, Paterson R, van West P, Williams C, Cable J. 2017. Hook, Line and Infection: A Guide to Culturing Parasites, Establishing Infections and Assessing Immune Responses in the Three-Spined Stickleback. Adv Parasitol 98:39–109.

29. Harris PD, Lyles AM. 1992. Infections of *Gyrodactylus bullatarudis* and *Gyrodactylus turnbulli* on guppies (*Poecilia reticulata*) in Trinidad. J Parasitol.

30. Xavier R, Faria PJ, Paladini G, Van Oosterhout C, Johnson M, Cable J. 2015. Evidence for cryptic speciation in directly transmitted gyrodactylid parasites of trinidadian guppies. PLoS One 10:1–15.

31. Bolger AM, Lohse M, Usadel B. 2014. Trimmomatic: A flexible trimmer for Illumina sequence data. Bioinformatics 30:2114–2120.

32. Kunstner A, Hoffmann M, Fraser BA, Kottler VA, Sharma E, Weigel D, Dreyer C. 2016. The genome of the trinidadian guppy, *Poecilia reticulata*, and variation in the Guanapo population. PLoS One 11:e0169087.

33. Dobin A, Davis CA, Schlesinger F, Drenkow J, Zaleski C, Jha S, Batut P, Chaisson M, Gingeras TR. 2013. STAR: Ultrafast universal RNA-seq aligner. Bioinformatics 29:15–21.

34. Love MI, Anders S, Kim V, Huber W. 2016. RNA-Seq workflow: gene-level exploratory analysis and differential expression. F1000Research.

35. Love MI, Huber W, Anders S. 2014. Moderated estimation of fold change and dispersion for RNA-seq data with DESeq2. Genome Biol 15:550.

36. Robinson MD, McCarthy DJ, Smyth GK. 2009. edgeR: A Bioconductor package for differential expression analysis of digital gene expression data. Bioinformatics 26:139–140.

37. Conesa A, Götz S, García-Gómez JM, Terol J, Talón M, Robles M. 2005. Blast2GO: A universal tool for annotation, visualization and analysis in functional genomics research. Bioinformatics 21:3674–3676.

38. Jones P, Binns D, Chang HY, Fraser M, Li W, McAnulla C, McWilliam H, Maslen J, Mitchell A, Nuka G, Pesseat S, Quinn AF, Sangrador-Vegas A, Scheremetjew M, Yong SY, Lopez R, Hunter S. 2014. InterProScan 5: Genome-scale protein function classification. Bioinformatics 30:1236–1240.

39. Supek F, Bošnjak M, Škunca N, Šmuc T. 2011. Revigo summarizes and visualizes long lists of gene ontology terms. PLoS One 6.

40. Langfelder P, Horvath S. 2008. WGCNA: An R package for weighted correlation network analysis. BMC Bioinformatics 9:559.

41. Fraser BA, Neff BD. 2010. Parasite mediated homogenizing selection at the MHC in guppies. Genetica 138:273–278.

42. Chatzopoulou A, Heijmans JPM, Burgerhout E, Oskam N, Spaink HP, Meijer AH, Schaaf MJM. 2016. Glucocorticoid-induced attenuation of the inflammatory response in zebrafish. Endocrinology 157:2772–2784.

43. Serhan CN, Chiang N, Van Dyke TE. 2008. Resolving inflammation: Dual anti-inflammatory and pro-resolution lipid mediators. Nat Rev Immunol 8:349–361.

44. Chen Y, Hao H, He S, Cai L, Li Y, Hu S, Ye D, Hoidal J, Wu P, Chen X. 2010. Lipoxin A4and its analogue suppress the tumor growth of transplanted H22 in mice: The role of antiangiogenesis. Mol Cancer Ther 9:2164–2174.

45. Pettitt TR, Rowley AF, Barrow SE, Mallet AI, Secombes CJ. 1991. Synthesis of lipoxins and other lipoxygenase products by macrophages from the rainbow trout, *Oncorhynchus mykiss*. J Biol Chem.

46. Knight J, Rowley AF. 1995. Immunoregulatory activities of eicosanoids in the rainbow trout (*Oncorhynchus mykiss*). Immunology.

47. Braden LM, Koop BF, Jones SRM. 2015. Signatures of resistance to *Lepeophtheirus salmonis* include a TH2-type response at the louse-salmon interface. Dev Comp Immunol 48:178–191.

48. Infante-Duarte C, Horton HF, Byrne MC, Kamradt T. 2000. Microbial Lipopeptides Induce the Production of IL-17 in Th Cells. J Immunol 165:6107–6115.

49. Weaver CT, Harrington LE, Mangan PR, Gavrieli M, Murphy KM. 2006. Th17: An Effector CD4 T Cell Lineage with Regulatory T Cell Ties. Immunity.

50. Onishi RM, Gaffen SL. 2010. Interleukin-17 and its target genes: Mechanisms of interleukin-17 function in disease. Immunology.

51. Peck A, Mellins ED. 2010. Precarious balance: Th17 cells in host defense. Infect Immun.

52. Wang X, Li C, Thongda W, Luo Y, Beck B, Peatman E. 2014. Characterization

and mucosal responses of interleukin 17 family ligand and receptor genes in channel catfish Ictalurus punctatus. Fish Shellfish Immunol 38:47–55.

53. Ding Y, Ai C, Mu Y, Ao J, Chen X. 2016. Molecular characterization and evolution analysis of five interleukin-17 receptor genes in large yellow croaker *Larimichthys crocea*. Fish Shellfish Immunol 58:332–339.

54. Monte MM, Wang T, Holland JW, Zou J, Secombes CJ. 2013. Cloning and characterization of rainbow trout interleukin-17A/F2 (IL-17A/F2) and IL-17 receptor a: Expression during infection and bioactivity of recombinant IL-17A/F2. Infect Immun 81:340–353.

55. Gunimaladevi I, Savan R, Sakai M. 2006. Identification, cloning and characterization of interleukin-17 and its family from zebrafish. Fish Shellfish Immunol 21:393–403.

56. Korenaga H, Kono T, Sakai M. 2010. Isolation of seven IL-17 family genes from the Japanese pufferfish *Takifugu rubripes*. Fish Shellfish Immunol 28:809–818.

57. Kono T, Korenaga H, Sakai M. 2011. Genomics of fish IL-17 ligand and receptors: A review. Fish Shellfish Immunol.

58. Mutoloki S, Cooper GA, Marjara IS, Koop BF, Evensen Ø. 2010. High gene expression of inflammatory markers and IL-17A correlates with severity of injection site reactions of Atlantic salmon vaccinated with oil-adjuvanted vaccines. BMC Genomics 11.

59. Zhang H, Fei C, Wu H, Yang M, Liu Q, Wang Q, Zhang Y. 2013. Transcriptome Profiling Reveals Th17-Like Immune Responses Induced in Zebrafish Bath-Vaccinated with a Live Attenuated Vibrio anguillarum. PLoS One 8:e73871.

60. Zhang H, Shen B, Wu H, Gao L, Liu Q, Wang Q, Xiao J, Zhang Y. 2014. Th17-like immune response in fish mucosal tissues after administration of live attenuated *Vibrio anguillarum* via different vaccination routes. Fish Shellfish Immunol 37:229–238.

61. Du L, Feng S, Yin L, Wang X, Zhang A, Yang K, Zhou H. 2015. Identification and functional characterization of grass carp IL-17A/F1: An evaluation of the immunoregulatory role of teleost IL-17A/F1. Dev Comp Immunol 51:202–211.

62. Wang T, Martin SAM, Secombes CJ. 2010. Two interleukin-17C-like genes exist in rainbow trout *Oncorhynchus mykiss* that are differentially expressed and modulated. Dev Comp Immunol 34:491–500.

63. Du L, Qin L, Wang X, Zhang A, Wei H, Zhou H. 2014. Characterization of grass carp (*Ctenopharyngodon idella*) IL-17D: Molecular cloning, functional implication and signal transduction. Dev Comp Immunol 42:220–228.

64. Korn T, Bettelli E, Oukka M, Kuchroo VK. 2009. IL-17 and Th17 Cells. Annu Rev Immunol 27:485–517.

65. Stockinger B, Veldhoen M. 2007. Differentiation and function of Th17 T cells. Curr Opin Immunol.

66. Langrish CL, Chen Y, Blumenschein WM, Mattson J, Basham B, Sedgwick JD, McClanahan T, Kastelein RA, Cua DJ. 2005. IL-23 drives a pathogenic T cell population that induces autoimmune inflammation. J Exp Med 201:233–240.

67. Wei L, Laurence A, Elias KM, O'Shea JJ. 2007. IL-21 is produced by Th17 cells and drives IL-17 production in a STAT3-dependent manner. J Biol Chem 282:34605–34610.

68. Wang T, Jiang Y, Wang A, Husain M, Xu Q, Secombes CJ. 2015. Identification of the salmonid IL-17A/F1a/b, IL-17A/F2b, IL-17A/F3 and IL-17N genes and analysis of their expression following in vitro stimulation and infection. Immunogenetics 67:395–412.

69. Gaffen SL, Jain R, Garg A V., Cua DJ. 2014. The IL-23-IL-17 immune axis: From mechanisms to therapeutic testing. Nat Rev Immunol.

70. Yin L, Ren J, Wang D, Feng S, Qiu X, Lv M, Wang X, Zhou H. 2019. Functional characterization of three fish-specific interleukin-23 isoforms as regulators of Th17 signature cytokine expression in grass carp head kidney leukocytes. Fish Shellfish Immunol 92:315–321.

71. Kumari J, Larsen AN, Bogwald J, Dalmo RA. 2009. Interleukin-17D in Atlantic salmon (*Salmo salar*): Molecular characterization, 3D modelling and promoter analysis. Fish Shellfish Immunol 27:647–659.

72. Chi H, Sun L. 2015. Comparative study of four interleukin 17 cytokines of tongue sole Cynoglossus semilaevis: Genomic structure, expression pattern, and promoter activity. Fish Shellfish Immunol 47:321–330.

73. Piazzon MC, Estensoro I, Calduch-Giner JA, Del Pozo R, Picard-Sánchez A, Pérez-Sánchez J, Sitjà-Bobadilla A. 2018. Hints on T cell responses in a fish-parasite model: Enteromyxum leei induces differential expression of T cell signature molecules depending on the organ and the infection status. Parasites and Vectors 11:443.

74. Veenstra KA, Wang T, Alnabulsi A, Douglas A, Russell KS, Tubbs L, Arous J Ben, Secombes CJ. 2017. Analysis of adipose tissue immune gene expression after vaccination of rainbow trout with adjuvanted bacterins reveals an association with side effects. Mol Immunol 88:89–98.

75. Kono T, Korenaga H. 2013. Cytokine Gene Expression in CD4 Positive Cells of the Japanese Pufferfish, *Takifugu rubripes*. PLoS One 8:e66364.

76. Ribeiro CMS, Pontes MJSL, Bird S, Chadzinska M, Scheer M, Verburg-van Kemenade BML, Savelkoul HFJ, Wiegertjes GF. 2010. Trypanosomiasis-induced Th17-like immune responses in carp. PLoS One 5.

77. Hu Y, Li A, Xu Y, Jiang B, Lu G, Luo X. 2017. Transcriptomic variation of locally-infected skin of Epinephelus coioides reveals the mucosal immune mechanism against Cryptocaryon irritans. Fish Shellfish Immunol 66:398–410.

78. Pedraza-Zamora CP, Delgado-Domínguez J, Zamora-Chimal J, Becker I. 2017. Th17 cells and neutrophils: Close collaborators in chronic Leishmania mexicana infections leading to disease severity. Parasite Immunol 39:e12420.

79. Heinen MP, Cambier L, Fievez L, Mignon B. 2017. Are Th17 Cells Playing a Role in Immunity to Dermatophytosis? Mycopathologia 18:251–261.

80. Shin JS, Ebersold M, Pypaert M, Delamarre L, Hartley A, Mellman I. 2006. Surface expression of MHC class II in dendritic cells is controlled by regulated ubiquitination. Nature 444:115–118.

81. Cho KJ, Walseng E, Ishido S, Roche PA. 2015. Ubiquitination by March-I prevents MHC class II recycling and promotes MHC class II turnover in antigen-presenting cells. Proc Natl Acad Sci U S A 112:10449–10454.

Tables

Table 1. Overview of samples used for RNA-seq analyses

Sample ID	Ind. ID	Date of sampling	Tissue	Inf. day	Inf. status	No of worms	No of reads (mln)	% of uniquely mapped reads
RNA_014	HC_13	13-07-2016	head skin	d4	infected	3	12.4	74.3
RNA_016	HC_15	13-07-2016	fins	d4	infected	7	13.2	86.9
RNA_019	HC_17	13-07-2016	fins	d4	noninfected	0	13.7	92.5
RNA_020	HC_17	13-07-2016	head skin	d4	noninfected	0	12.8	87.1
RNA_022	HC_19	13-07-2016	fins	d4	noninfected	0	16.7	94.0
RNA_023	HC_19	13-07-2016	head skin	d4	noninfected	0	18.1	83.8
RNA_028	HC_21	13-07-2016	fins	d4	infected	25	14.8	92.4
RNA_029	HC_21	13-07-2016	head skin	d4	infected	25	15.4	71.1
RNA_032	HC_24	13-07-2016	head skin	d4	noninfected	0	14.1	88.8
RNA_070	HC_06	17-07-2016	fins	d8	infected	1	14.2	85.1
RNA_076	HC_09	17-07-2016	fins	d8	infected	8	17.0	91.4
RNA_081	HC_11	17-07-2016	head skin	d8	infected	120	17.4	86.7
RNA_082	HC_16	17-07-2016	fins	d8	infected	8	17.7	89.8
RNA_084	HC_16	17-07-2016	head skin	d8	infected	8	17.3	93.8
RNA_087	HC_22	17-07-2016	head skin	d8	infected	13	14.8	85.9
RNA_088	HC_25	17-07-2016	fins	d8	noninfected	0	13.5	91.7
RNA_090	HC_25	17-07-2016	head skin	d8	noninfected	0	16.1	86.3
RNA_091	HC_26	17-07-2016	fins	d8	noninfected	0	13.1	90.1
RNA_093	HC_26	17-07-2016	head skin	d8	noninfected	0	12.1	68.3

Table 2. Summary of gene co-expression networks associated with *Gyrodactylus* infection including number of genes per module, significant correlations, module preservation, and gene ontology enrichment. Gene module names denote tissue type in which they were defined (fin or head skin) and given an arbitrary colour label (assigned during WGCNA) to distinguish individual modules.

Module Name	n genes	Infection status correlation	Worm burden correlation	Preserved in other tissue?	Most significant GO	Infection-related GO terms
Fins						
Fin-black	889	+0.67	NS	Yes	peptide biosynthetic proces	macrophage activation, antimicrobial humoral response, response to fungus, tumor necrosis factor production, response to virus, chemokine (C-C motif) ligand 2 secretion, interleukin-6 secretion,

						B cell receptor transport
Fin-cyan	417	NS	+0.93	No	oxaloacetate metabolic process	regulation of macrophage chemotaxis, Toll signaling pathway, viral release from host cell
Head						
Head-violet	116	-0.66	NS	No	calcium import into the mitochondrion	mucus secretion
Head-cyan	544	+0.63	NS	Yes	visual perception	viral transport, type I interferon production
Head-red	1288	NS	+0.63	Yes	RNA processing	suppression of host defences, globlet cell differentiation, immunological synapse formation, regulation of T cell apoptotic process
Head-darkred	272	NS	+0.74	Yes	regulation of DNA damage response	establishment of skin barrier, response to interferon-gamma, wound healing, leukocyte aggregation, immune response, antigen processing and presentation, positive regulation of T cell differentiation
Head-pink	1103	NS	+0.94	Yes	JAK-STAT cascade	regulation of defence response, regulation of immune system process, keratinocyte proliferation, innate immune response, activated T cell proliferation, type I interferon signaling pathway, leukocyte migration, viral latency, regulation of immunoglobulin production, B cell proliferation, inflammatory response, interleukin-23 production, response to interleukin-18

Head-brown	1744	NS	-0.92	Yes	sodium ion export across plasma membrane	mast cell migration, response to chemokine, regulation of platelet aggregation, MHC class II biosynthetic process, interleukin-1 biosynthetic process, lymphocyte mediated immunity

Figure captions

Figure 1. Principal component analysis of RNA-Seq samples, sequenced from fins and head skin of guppies (*Poecilia reticulata*), four and eight days after infection with *Gyrodactylus bullatarudis.*

Figure 2. Cytokine-cytokine receptor interactions identified by metabolic pathway analysis (KEGG) to be differentially expressed in fins of infected and uninfected fish. Significantly differentiated genes are in pink; genes which were missed from automatic annotation, but which were included into the list of differentially expressed genes in Supplementary Table S3 are framed with red (CXCL1, growth-regulated alpha protein, LOC103476162 in Supplementary Table S2; CCL2, monocyte chemotactic protein 1B-like, LOC103466287 in Supplementary Table S3). Blue boxes indicate automatically annotated but not significantly differentiated genes, while white boxes indicate genes which were not annotated in the guppy genome.

Figure 3. IL-17 signalling pathway identified by metabolic pathway analysis (KEGG) to be differentially expressed in fins of infected and uninfected fish. Significantly differentiated genes are in pink; genes which were missed from automatic annotation, but which were included into the list of differentially expressed genes in Supplementary Table S3 are framed with red (CXCL1, growth-regulated alpha protein, LOC103476162 in Supplementary Table S2; CCL2, monocyte chemotactic protein 1B-like, LOC103466287 in Supplementary Table S3). Blue boxes indicate automatically annotated but not significantly differentiated genes, while white boxes indicate genes which were not annotated in the guppy genome.

Figure 4. Heatmap of RNA-Seq expression z-scores computed for genes identified as differentially expressed in fins of infected and uninfected fish. Only genes annotated as belonging to cytokine-cytokine receptor interaction (Figure 1) and IL17 (Figure 2) families are shown. Gene names follows KEGG annotation from Figures 1 and 2 and genes IDs are given in brackets.

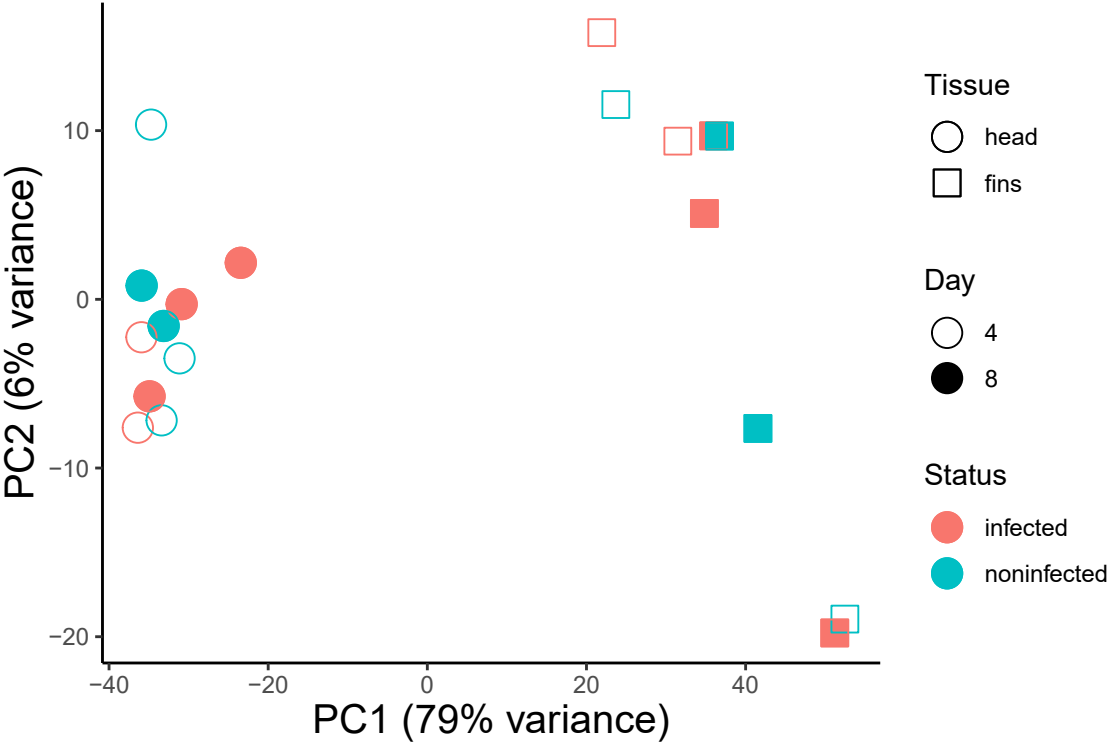
PC2 (6% variance)
10
0
−10
−20
−40
−20
0
20
40
PC1 (79% variance)
Tissue
head
fins
Day
4
8
Status
infected
noninfected

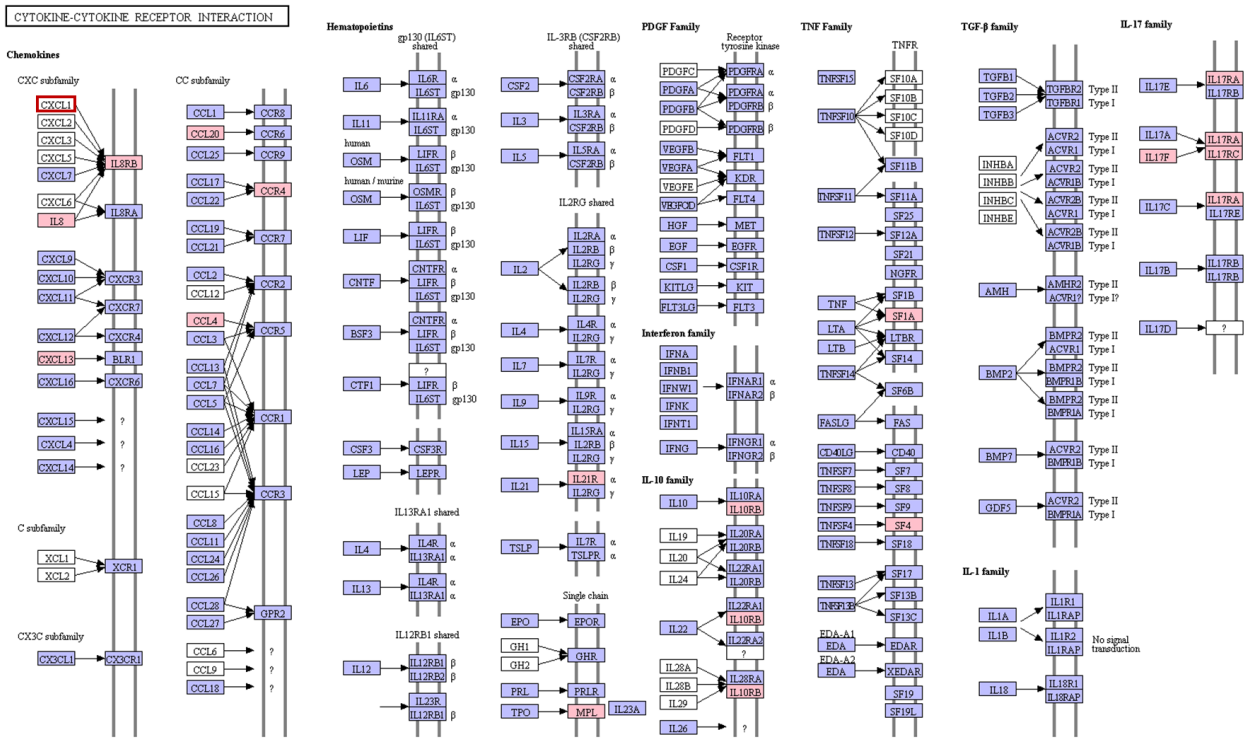
CYTOKINE-CYTOKINE RECEPTOR INTERACTION
Chemokines
CXC subfamily
CXCL1
CXCL2
CXCL3
CXCL5
CXCL7
IL8RB
CXCL6
IL8
IL8RA
CXCL9
CXCL10
CXCL11
CXCR3
CXCR7
CXCL12
CXCR4
CXCL13
BLR1
CXCL16
CXCR6
CXCL13
CXCL4
CXCL14
C subfamily
XCL1
XCL2
XCR1
CX3C subfamily
CX3CL1
CX3CR1
CC subfamily
CCL1
CCR8
CCL20
CCR6
CCL25
CCR9
CCL17
CCL22
CCR4
CCL19
CCL21
CCR7
CCL2
CCL12
CCR2
CCL4
CCL3
CCR5
CCL13
CCL7
CCL5
CCR1
CCL14
CCL16
CCL23
CCL15
CCR3
CCL8
CCL11
CCL24
CCL26
CCL28
CCL27
GPR2
CCL6
CCL9
CCL18
Hematopoietins
gp130 (IL6ST) shared
IL6
IL6R
IL6ST
IL11
IL11RA
human
OSM
LIFR
human / murine
OSMR
LIF
CNTF
CNTFR
BSF3
CTF1
CSF3
CSF3R
LEP
LEPR
IL13RA1 shared
IL4
IL4R
IL13
IL12RB1 shared
IL12
IL12RB1
IL12RB2
IL23R
IL-3RB (CSF2RB) shared
CSF2
CSF2RA
IL3
IL5
IL2RG shared
IL2
IL2RA
IL2RB
IL2RG
IL4
IL7
IL7R
IL9
IL9R
IL15
IL15RA
IL21
IL21R
TSLP
TSLPR
Single chain
EPO
EPOR
GH1
GH2
GHR
PRL
PRLR
TPO
MPL
IL23A
PDGF Family
Receptor tyrosine kinase
PDGFC
PDGFRA
PDGFA
PDGFB
PDGFRB
PDGFD
VEGFB
FLT1
VEGFA
KDR
VEGFE
FLT4
VEGFC
HGF
MET
EGF
EGFR
CSF1
CSF1R
KITLG
KIT
FLT3LG
FLT3
Interferon family
IFNA
IFNB1
IFNW1
IFNK
IFNT1
IFNAR1
IFNAR2
IFNG
IFNGR1
IFNGR2
IL-10 family
IL10
IL10RA
IL10RB
IL19
IL20
IL24
IL22RA1
IL22
IL22RA2
IL28A
IL28B
IL29
IL28RA
IL26
TNF Family
TNFR
TNFSF15
SF10A
SF10B
TNFSF10
SF10C
SF10D
SF11B
TNFSF11
SF11A
SF25
TNFSF12
SF12A
SF21
NGFR
TNF
SF1B
LTA
SF1A
LTB
LTBR
SF14
TNFSF14
SF6B
FASLG
FAS
CD40LG
CD40
TNFSF7
SF7
TNFSF8
SF8
TNFSF9
SF9
TNFSF4
SF4
TNFSF18
SF18
TNFSF13
SF17
TNFSF13B
SF13B
SF13C
EDA-A1
EDA
EDAR
EDA-A2
EDA
XEDAR
SF19
SF19L
TGF-β family
TGFB1
TGFB2
TGFB3
TGFBR2
TGFBR1
Type II
Type I
ACVR2
ACVR1
INHBA
INHBB
INHBC
INHBE
ACVR2B
AMH
AMHR2
ACVR1
BMP2
BMPR2
BMPR1B
BMPR1A
BMP7
GDF5
IL-17 family
IL17E
IL17RA
IL17RB
IL17A
IL17F
IL17RC
IL17C
IL17RE
IL17D
?
IL-1 family
IL1A
IL1B
IL1R1
IL1RAP
IL1R2
No signal transduction
IL18
IL18R1
IL18RAP

IL-17 SIGNALING PATHWAY

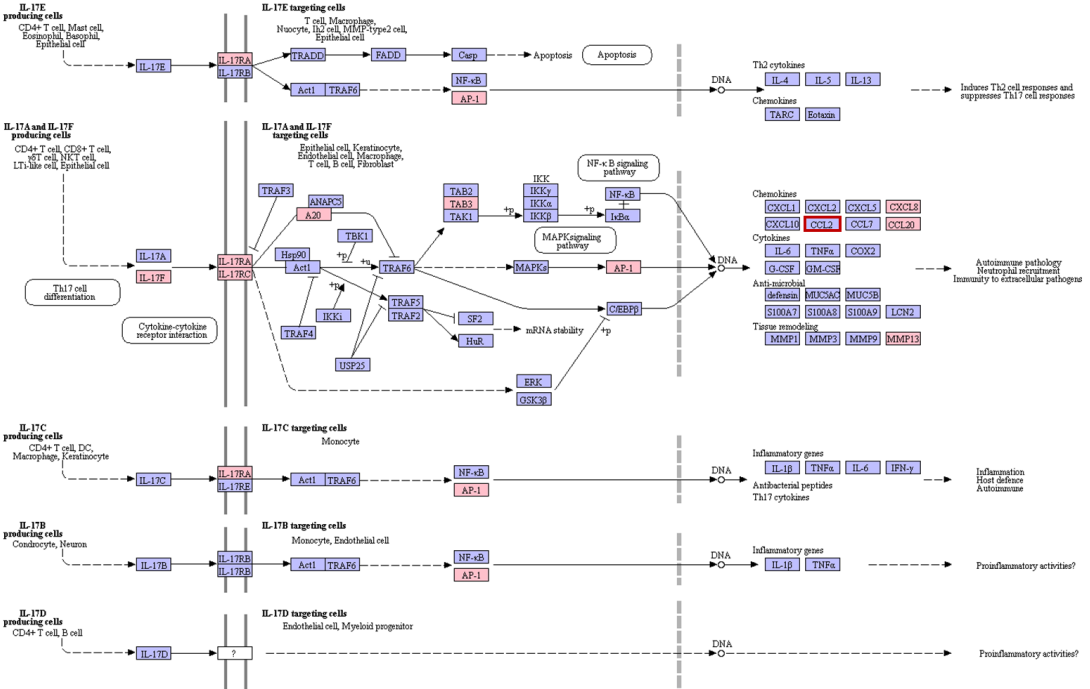

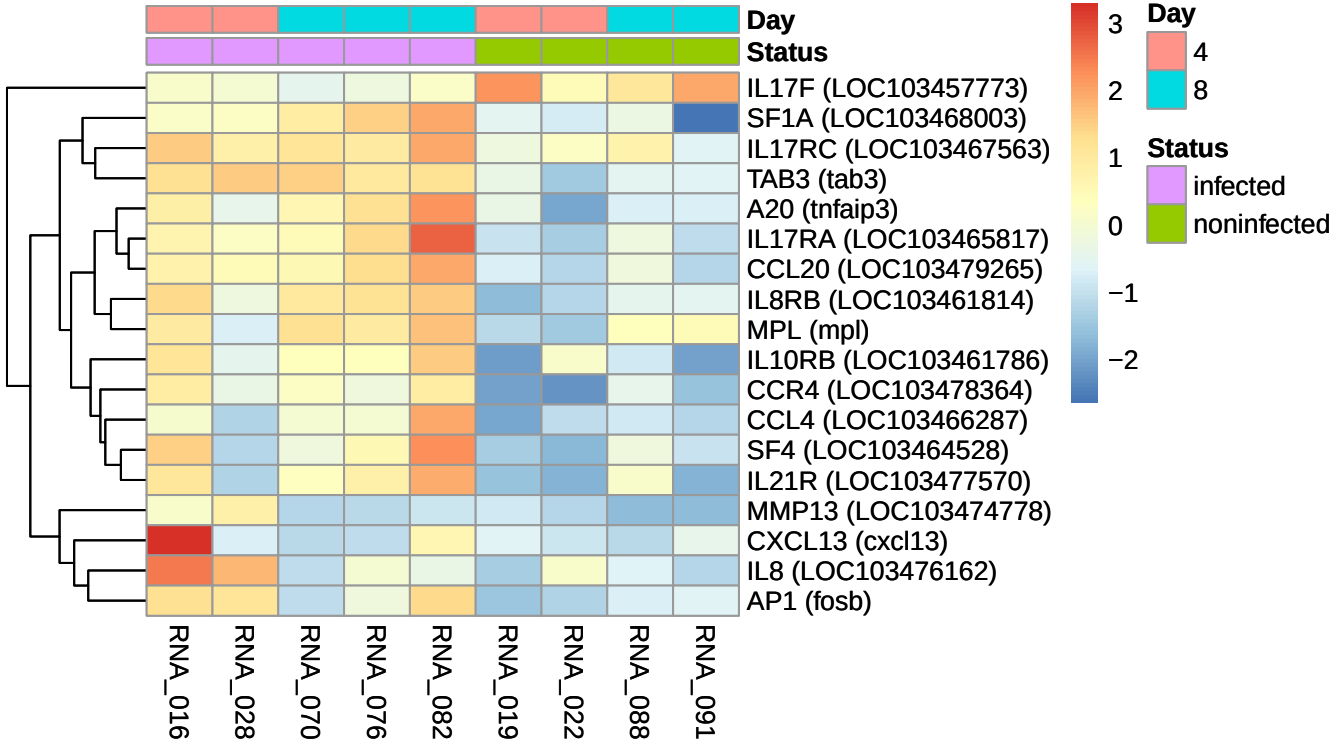
Day
Status
IL17F (LOC103457773)
SF1A (LOC103468003)
IL17RC (LOC103467563)
TAB3 (tab3)
A20 (tnfaip3)
IL17RA (LOC103465817)
CCL20 (LOC103479265)
IL8RB (LOC103461814)
MPL (mpl)
IL10RB (LOC103461786)
CCR4 (LOC103478364)
CCL4 (LOC103466287)
SF4 (LOC103464528)
IL21R (LOC103477570)
MMP13 (LOC103474778)
CXCL13 (cxcl13)
IL8 (LOC103476162)
AP1 (fosb)
RNA_016
RNA_028
RNA_070
RNA_076
RNA_082
RNA_019
RNA_022
RNA_088
RNA_091
3
2
1
0
−1
−2
Day
4
8
Status
infected
noninfected