DOCTOR OF PHILOSOPHY

The relationship between behavioural phenotypes and social interactions in the guppy (Poecilia reticulata)

Thomas, Dawn Karen

Award date:
2011

Awarding institution:
Bangor University

The relationship between behavioural phenotypes and social interactions in the guppy (*Poecilia reticulata*)

Dawn Karen Thomas

This work is presented in accordance with the requirements of Bangor University, for the degree of Doctor of Philosophy.

School of Biological Sciences
September 2011

Abstract

Non random group assortment is a common phenomenon in many animal societies. It creates a social environment, which can differ widely depending on the mixture of individuals, and on the surrounding ecological environment. In this study I measured the interactions between individual behavioural phenotypes and social structure of the Trinidadian guppy (*Poecilia reticulata*).

Previous work on wild guppies has shown both negative and positive assortment according to behavioural phenotype in mixed shoals. In Chapters 3 and 6, using replicated semi-natural populations of adult female guppies, I found negative assortment by behavioural phenotype. In Chapter 3 I investigated the effect of heightened predation risk on this pattern of assortment finding females increased this assortment and formed tighter associations with fewer individuals. This pattern is expected, in light of the evolution of cooperation under predation risk.

Bold and shy individuals differ in their sociability, which I hypothesised would lead to bold and shy fish displaying different social partner preferences. In Chapter 4 I found shy females preferred to associate with bold rather than shy stimulus females, when both were unfamiliar, but bold showed no preference. In Chapter 5 I found that males, which had a tendency to be bolder, preferred bold females and those with a tendency for shyness preferred shy females when the choice was of females from the same (familiar) habitat. However, the males switched preferences when females were unfamiliar. The implications for cooperation and mate choice are discussed, together with the influence these decisions might have on social network structure.

Finally, influences from within the group, can affect how individuals interact; impacting on the choice of with whom to forage or co-operate. Male harassment, for example, has been shown to increase female's risk of predation and reduce the time spent foraging. In Chapter 6 I investigated the impact of males on the growth of bold

and shy females. Shy females showed a slower rate of weight gain with male introduction to their social environment; whereas bold females showed a reduction when small females were introduced.

Contents

List of figures

List of tables

Acknowledgements

I would like to firstly thank my supervisor Dr Darren Croft. Without his support, encouragement and energy I could not have completed this work. Thanks also go to his team Dr Safi Darden, Alessandro Maccario, Matthew Edenbrow and David Jacoby for providing advice in various forms.

Whilst on Trinidad I both enjoyed and succeeded in my work thanks to Prof. Indar Ramnarine. He provided support; humour and enthusiasm which helped me live and work effectively in a foreign environment. His friendly, capable and energetic team, especially Paulette, Karan and Raj, I value both professionally and personally. I am also indebted to my fellow researchers who supported and laughed with me, including Palestina Guevara-Fiore, Erica Morley, Amy Deacon. A huge thank you, also, to all at Oasis Roti bar for sustenance and human kindness.

At Bangor I must thank friends and colleagues who have enhanced my studies and free time. A special thank goes to Prof Roger Hughes who agreed to step in as my Bangor supervisor in spite of a looming retirement date and happens to also entertain with a mic and guitar. Thanks to Jane Tyson, Serinde van Wijk and Sonia Pascoal for work related chats.

Finally, I must give a huge thank you to friends and family for all the help, fish-related presents and attempts at understanding why and what I am doing. Your ears, shoulders and smiles have supported me throughout.

Dedicated to my Mum, Sandra.

Declaration

The work contained in this thesis has involved collaborations with Safi Darden (SD); Richard James (RJ) and Jens Krause (JK). Their contributions are indicated below. My PhD supervisor Darren Croft (DPC) contributed to all studies.

Chapter 2: SD and DPC assisted with data collection. In particular SD and DPC established the experimental populations and collected photographs documenting shoal composition. RJ and JK provided planning discussions and regular draft feedbacks. RJ also provided suggestions regarding the methodologies to be used.

Chapter 3: SD and DPC as Chapter 2 because the same study was utilised for both chapters.

Ethical Statement

The number of fish collected, including those required as a stimulus, was kept to a minimum. I reduced the number of fish by utilising the same stimulus fish for several tests at times. All animals were housed socially under appropriate densities, with natural material and only for the duration of testing with appropriate settling time beforehand. After completion of testing all wild caught fish were released into an artificial pond at the University of the West Indies, Trinidad, lab fish were released back into a large stock tank. In Chapter 3, fish were anaesthetised before culling and only a minimum number were used for the amount of conspecific alarm material needed for use in the study.

1 Introduction

Group living is common across taxonomic groups and there is a great deal of diversity to the size, composition and stability of social groups ranging from the small long-term groups of related individuals in the Sperm Whale (*Physeter macrocephalus*) (Whitehead 2003) or lions (*Panthera leo*) (Krebs and Davies 1993) to groups of vast herds of African Buffalo (*Synceros caffer*) (Sinclair 1977) or shoals of guppies (*Poecilia reticulata*) (Magurran 2005) to seasonal gatherings for mating such as in anurans (Wells 2007) or red deer (*Cervus elaphus*) (Clutton-Brock *et al.* 1982). The study of animal groups has attracted a great deal of attention particularly relating to the mechanisms and functions underpinning group living. A common feature of most animal groups is that interactions are non-random and individuals are interconnected heterogeneously. The recent application of Social Networks Analysis (SNA) to various animal populations has been particularly useful in describing this structure and testing hypotheses relating to the population social fine structure (i.e. who interacts with whom). These social networks have variously been shown to consist of group assortment by age and sex in Galápagos sea lions (*Zalophus wollebaeki*) (Wolf *et al.* 2007); persistent pairings in female guppies (Croft *et al.* 2004b) and individual performance of particular roles such as conflict regulators in macaques (*Macaca nemestrina*) (Flack *et al.* 2006) or informed directors of group foraging in dolphins (*Tursiops sp.*) (Lusseau 2007). The study of animal social networks has furthered understanding of the development and maintenance of cooperation, the maintenance of social structure, the consequences of the removal of individuals and the manner in which information is used within populations (Santos *et al.* 2006; Flack *et al.* 2006; McComb *et al.* 2001).

Certain theoretical progress has already been made in terms of understanding the patterns conducive to cooperation and information and disease transfer using SNA (Nowak and May 1992;

Newman 2001; Ohtsuki *et al.* 2006; Santos *et al.* 2006). SNA has also allowed researchers to pinpoint various roles and certain positioning of individuals with particular attributes such as sex, dominance and size. However, much more can be learnt, for instance, in terms of how the network structure differs according to environmental conditions. The use of SNA allows us to quantify social interactions at the level of the individual, lending itself to the study of how individuals with differing behavioural phenotypes interact. A relatively new research subject in which the variation (along a continuum), rather than the mean, is the interest. The fact that individuals are consistent in their behaviour and this behaviour translates into how they interact socially provides an important route of research and the premise of this thesis.

This chapter will initially discuss the random assortment seen in groups and the implications of and for familiarity and cooperation. Social Network analysis is introduced with an assessment of the non-random assortment in network structure and the consequences thereof, highlighting some of the findings seen so far in animal societies. The importance of studying behavioural phenotypes is then considered, especially in the context of the social environment. Finally, there is an introduction of the study species and its relevance to the subject matter in this study, before an introduction of the experimental chapters.

1.1 Social groups

Animals form groups for a variety of reasons and this phenomenon is widespread in animal populations (fish, for example, have been shown to shoal for anti-predatory reasons and in order to increase foraging (Pitcher and Parrish 1983)). Animals of different sex and species can be brought together by similar or dissimilar needs and it is therefore not unexpected to find that there are wide variations in the size, composition and stability of animal social groups. One of

the benefits of group membership is the increased speed of food location. Pitcher *et al.* (1982) found that in several species of freshwater fish an increase in group size was accompanied by an increase in the speed of food location. Grouping provides a number of antipredator benefits. For example, increased levels of vigilance can lead to increased predator detection (Treherne and Foster 1982; Beauchamp 2010; Periquet *et al.* 2010). If a predatory attack is mounted, being part of a group may confuse the predator due to a sensory overload, a phenomenon known as the confusion effect (Treherne and Foster 1982). Being part of a group will dilute the risk to any one individual of been captured and this effect will increase sub-linearly with increased group size, when the predator is limited as to the number of animals it can consume (Watt *et al.* 1997). For example, horses on the Camargue, which grouped together in large groups, experienced reduced attacks by biting flies than in small groups (Duncan and Vigne 1974). Foster and Treherne (1981) found that there was no correlation between attack rates of a juvenile fish (*Sardinops sagax*) on marine insects (*Halobates robustus*) with group size of the prey animal and there was a negative correlation between group size and capture. However, it is difficult to separate the effects of dilution from predator avoidance which occurs due to groups of prey being encountered less often, dependent on the predator's foraging behaviour. In fact research indicates that antipredator affects of living in groups is reliant on several factors at once. Wrona and Dixon (1991) found a net increase in fitness due to decreased predation was only apparent in the Trichopteran *Rhyacophila vao*, when both avoidance and dilution effects were combined. It is clear from research that both the antipredator and foraging benefits can be experienced by individuals which live in groups; however, these benefits are mediated by particular costs.

The costs of group living can include increased competition for limited resources (Ward *et al.* 2006). This could result in a reduction in the rate of feeding either due to different social positions

within the group having differential foraging success or because of interference competition (Ranta *et al.* 1993). If competition occurs in the form of aggression with conspecifics, this could result in loss of energy or injury (Neat *et al.* 1998) or in an increase in the level of predation due to conspicuousness or reduced vigilance (Brick 1998). Grouping can also be costly in terms of the spread of disease and parasites transmitted by contact. Brown and Brown (1986) found more colonially nesting cliff swallow (*Hirundo pyrrhonota*) bugs per nest in larger colonies which could affect nestling survival by up to 50%. Primate species, which differ in mean sleeping group size (in combination with mean weight), also differed in the level of infection with malaria (Davies *et al.* 1991). The authors suggest this effect could be due to the increased odour emitted from large groups which attracted the mosquito vector. Many other species specific effects occur such as competition for egg laying space in the smooth-billed ani (*Crotophaga ani.*) which resulted in removal of eggs from the nest and increased per capita egg number laid overall (Schmaltz *et al.* 2008).

The costs and benefits of group living can be ameliorated by many environmental factors such as level of predation risk, the presence of parasites and kin composition of the group (reviewed in Krause and Ruxton 2002). Clearly, individuals and populations will experience differential consequences of grouping. These consequences will change according to conditions; with the group composition and with their own phenotype. Individuals within the group will trade-off the costs and benefits of group membership, which will lead to temporal variation in grouping behaviour. For example, Milinski (1979) showed that individual sticklebacks, given two patches of food which differed in their profitability, made trade-offs between staying within its group and leaving to forage elsewhere. These decisions appeared to be based on group size and food availability and resulted in the formation of optimal foraging groups (groups within which all individuals gain equal payoffs). Individuals

within the group can alter their behaviour to mediate foraging costs whilst maintaining group composition. For instance, despite the lack of aggressive interactions and the loss of antipredator benefits, redshank (*Tringa tetanus*) spread out due to the actions of their crustacean prey when the birds fed closely together (Selman and Goss-Custard 1988).

The costs and benefits of group living will depend on the phenotypic make-up of the individuals within. The wide variation of individual phenotypes will create conflict between individuals in respect to the optimal group size, suggesting many groups which are formed will be suboptimal. Krause and Ruxton (2002) reasoned that within the group each individual will have a preference for a different optimal group size. They use the example of a foraging group with a hierarchical system. Increasing group size will favour the dominant individuals over subordinate ones, which would benefit from leaving the group once the group size reaches a threshold level. For all individuals within a group it pays to assess their own performance in relation to others, as changes in group composition will eventually lead to changes in the costs and benefits of staying in the group (Ranta *et al.* 1993). Non random group assortment is a common phenomenon in many animal societies and is believed to be a way individuals maximise the benefits of group living whilst minimising the costs.

1.2 Assortment of groups

Groups within species tend to form between particular individuals of similar phenotype such as sex and size. The reasons for which have been variously reported and include activity synchrony (Conradt and Roper 2000), reduction of competition (Lindström and Ranta 1993) and increased foraging rates (Ward and Krause, 2001). The avoidance of predation has been well studied in its roll in directing

group composition. Assortment according to physical phenotypes (such as size and colour) has been explained in terms of the oddity effect which has been studied from the perspectives of the predator (predators prefer odd prey when predating on groups) and prey (individuals assort according to phenotypic similarities) with contrasting results (reviewed in Krause and Ruxton 2002).

1.2.1 Assortment in shoaling fish

Shoals are dynamic aggregations; the spatial distributions between and within them altering with different environmental properties and motivational states. Proximity in fish shoals is often delineated as no more than 4 to 5 body lengths between each fish. Pitcher *et al.* (1983) found that co-ordinated group behaviours were only possible in fish with this distance or less between them. The nature of many freshwater fish such as guppies and sticklebacks (*Gasterosteus aculeatus*) is to form free-ranging dynamic groups (Krause and Ruxton, 2002). Each encounter between shoals provides opportunities for shoals to join or for individuals to move between shoals. The encounters can result in passive assortment, perhaps due to swimming performance being correlated with phenotypic traits (e.g. body length), or active assortment, which relies on decisions made by individuals.

If habitat use is non-random, according to a particular phenotype, it will limit the opportunities for interactions and may lead to passive phenotypic assortment of groups. Habitat use can differ between the sexes (Darden and Croft 2008), or according to variation in size (Reichard *et al.* 2002) or behavioural phenotype (Wilson 1998). The more vulnerable fish may avoid areas of high predation risk; the larger fish may choose to frequent more risky areas due to an increased resource requirement and perhaps reduced chance of being predated.

In order for individuals to maximise the benefits of group living they may make active decisions about with whom to shoal.

Decisions due to particular preferences have been found in size, species, familiarity and competitive ability (reviewed in Krause and Ruxton, 2002). Lindström and Ranta (1993) suggest size assortment could be driven by competitive ability as well as protection from predation. Smaller fish are often out competed by larger fish and so might avoid shoaling with larger fish. This corresponds with a study by Lachlan *et al.* (1998) which showed small fish chose small conspecifics with which to shoal when given a choice of equal numbers of different sized fish. However, large fish showed no preference. The benefits of size assortment in terms of increased feeding rate have been seen in minnows (*Pimephales promelas*). Ward and Krause (2001) found that shoals, which were larger and smaller than the focal fish in length, detrimentally affected their feeding activity. Size matching has also been related to avoidance of predation, where like shoal with like to avoid being conspicuously odd within the shoal (Krause and Ruxton, 2002). In some sexually dimorphic species partial sexual segregation will occur, due to this size preference.

Fish have also shown an active partner preference for un-parasitized fish. Given a choice, juvenile sticklebacks showed a preference for shoaling with conspecifics which were not infected with an ectoparasite (Dugatkin *et al.* 1994b). Dugatkin *et al.* (1994b) suggest that sticklebacks were making visual assessments of the combination of the parasite and the parasite-induced behaviour, which included an increase in time spent in the riskier surface vicinity, and erratic movements, increasing their conspicuousness to predators. Krause *et al.* (1996) found that un-parasitized individuals did not avoid shoals on the basis of small numbers of parasitized individuals within, only entirely infected shoals. They suggest that these decisions are made in order to avoid predation by the oddity effect. The ability to recognise others is certainly a prerequisite for active choice and much work has been carried out to assess the mechanisms individuals utilise when making choices about joining particular others. Various pathways have been studied including the

development of social or habitat familiarity, the ability to recognise kin and context-dependent familiarity.

1.2.2 familiarity and partner choice

The ability to develop familiarity has been shown to occur in many species, especially in fish (Ward and Hart 2003). This ability can help individuals to choose partners which are likely to cooperate during predator inspection (Milinski *et al.* 1990) or avoid foraging with those which are higher in competitive ability (Metcalfe and Thomson 1995). The benefits of shoaling with familiars can help to mediate some of the costs of grouping by reducing aggressive behaviour and therefore lowering levels of competition. Utne-Palm and Hart (2000) found that less aggression took place between pairs of familiar sticklebacks and food was shared more equally the longer they had been together, than with unfamiliar pairs. Predation can also be reduced in groups consisting of familiar individuals by increasing the coordination of antipredator behaviours. Chivers *et al.* (1995) showed that fathead minnow shoals, which contained individuals familiar to each other, showed greater shoal cohesion, more dashing behaviour and more inspections involving several inspectors than shoals consisting of unfamiliar fish.

Both aforementioned examples can be seen as incidences of context-dependent familiarity. Described by Dugatkin and Sih (1995) as those situations within which the choice of partner is dependent on previous experience of a particular context with that partner (such as during predation or a foraging context) and could influence the fitness of one or both individuals. Visual recognition, in the absence of a situational context (termed context independent recognition), can take time to develop (Griffiths and Magurran 1997a) and can be dependent on population density. Griffiths and Magurran (1997b) tested the level of preference for familiars in females from pools within a river systems which differed in the total number of females resident (from 8-194) for at least 3 months. They found the greater the number of individuals from the original pool the weaker the

preference was for familiars (Griffiths and Magurran 1997b). Familiarity can, however, develop based on odours such as diet or habitat cues. Ward *et al.* (2004b) found that sticklebacks were able to distinguish others on the basis of their diet and habitat, which they then showed was exhibited by sticklebacks in the wild (Ward *et al.* 2007). The authors suggest this may allow individuals to acquire local information and this can occur relatively quickly. Reduced preference for individuals from their original habitat was shown to occur just 3 hours after they were introduced into a new environment. Preference for individuals from the new habitat was exhibited over a similar timescale in a laboratory study by Webster *et al.* (2007). Webster *et al.* (2007) also found that shoals consisting of individuals which had shared recent resources were more cohesive than those which had not, suggesting an anti-predatory benefit to this form of assortment.

The use of familiarity in mate choice is expected to allow for discrimination between either genetically related individuals or those with which an individual has already mated. This is likely to differ according to sex as males and females often differ in priorities regarding reproductive output. The less discriminatory sex, in terms of choosing quality partners, may utilise familiarity in order to avoid mating with those which he/she has previously mated. In so doing, these individuals are ensuring reproductive success by distributing their genes widely. Male guppies, which prioritise multiple mating, have been shown to prefer novel females (Kelley *et al.* 1999). However, the level of discrimination was shown to alter according to the previous environmental conditions. Males which had experienced limited access to unfamiliar females spent significantly more time courting unfamiliar stimulus females in the test, whereas, males which had previously experienced no such restrictions, showed no discrimination. Female guppies have also shown preferences for unfamiliar males (Hughes *et al.* 1999).

Repeated interactions with familiar others is the foundation for the evolution and maintenance of reciprocal altruism (Trivers

1971). As with the development of familiarity, there may be a limit as to the number of individuals, in terms of the formation of cooperation within populations. Ohtsuki *et al.* (2006) suggests that cooperation will evolve in a population if the benefit to cost ratio of the cooperative act exceeds the average number of interactions between individuals. In evolutionary models the social network structure shown to support the evolution and maintenance of cooperation is one of strong associations with a small number of partners in small hubs (Santos 2006a; Saavedra *et al.* 2009). The non-random social structure in many populations suggests that cooperation might be carried out by some individuals more than others. Variation in cooperation might be either in the propensity to cooperate or in the ability to behave plastically in cooperative interactions (see Bergmüller *et al.* 2010 for a review).

The form and formation of a group depends on many factors which fluctuate with environmental and motivational changes. A general impression of a group is, therefore, insufficient to explain the reason for its existence and its composition. Neither can dyadic observations be assembled to build a complete picture of the complexity of group interactions. One route towards illumination, however, has been the use of Social Network Analysis.

1.3 Social networks

A common theme in biological systems (as in many other systems) is the network of interactions involved at every level of organisation from genes to communities. Until recently, social interactions were measured as isolated exchanges between pairs, rather than as complex integrated networks involving all the members of a population. Social Network Analysis (SNA) provides a tool with which to build a visual representation of the various levels of associations occurring between individuals within the population

being studied. It is used to produce metrics that can describe both the local and global structure of group or population (see table 1.3.1 for common terms).

Network analyses on human social interactions differ slightly from that of non-humans. Human SN research has been primarily concerned with using data based on interactions between pairs of individuals or on vast amounts of data such as the World Wide Web. Whilst some animal social network research has used directly observed interactions, most, especially that of non-primates, is taken from assumed interactions based on membership of a group. They are naturally limited in sample size and often are unable to include all members of the population. Analysis of these two different types of data, therefore, differs. Network analysis using group-based associations often needs to control for differences in group size and non-random group assortment (Croft *et al.* 2011). Measures describing human social networks and their dynamics may, therefore, differ in their interpretation from those gleaned from non-human animals.

In animal societies SNA is usually carried out by using points or "nodes" to indicate individuals within the network, with lines called "edges" which symbolise the links between individuals. How each pair is assigned an edge is dependent on the study species. In some taxa, such as in the primates, social data has been taken from all members over a long period and researchers may record direct interactions between individuals (such as grooming or aggression) (Kasper and Voelkl 2009). However, in many animal species, individual interactions are not easily accessed; social relationships must be inferred from group membership. One such approach is to use the Gambit of the Group (Whitehead and Dufault 1999) which assumes that social interactions occur within groups. Therefore, by recording group composition one can infer the structure of social interactions. Clearly this assumption needs to be based on knowledge of the biology of the study species as it assumes that all individuals

Table 1.3.1: Common terms in Network analysis

Term	What it measures	Indication in animal networks
degree (k)	The number of direct connections (edges) each individual has with other members of the population.	Able to predict the probability of information or a particular type of airborne disease spreading through a population. A high k = a high spread of disease such as TB in African Buffalo (Cross *et al.* 2004). At an individual level a high degree indicates a high level of gregariousness and individuals with high degree are often found associating together creating a positive degree correlation (Newman 2002).
weighted degree	The total number of direct connections which are seen between pairs.	provides a measure of the connection *strength* within the network, which can be used in the analysis of the flow of pathogens of varying incubation periods or of types of information flow, such as some forms of social learning, which are likely to benefit from repeated interactions (Laland and Williams 1997).
cluster coefficient (C)	A measure of cliquishness, this measure is the number of direct edges an individual's neighbours have with each other as a proportion of the total number of connections that could exist.	Can help us understand population susceptibility to epidemics. A high measure of "C" = a low spread of disease because it will be contained among a few individuals. (e.g. Watts and Strogatz 1998). An individual with a high cluster coefficient score could be lost from its cluster without much disruption to a population, as links between pairs are maintained (Newman 2002).
weighted cluster coefficient	Several routes can be used to gain a measure of cliquishness by using the total number of interactions.	Gives a measure of the stability of cliques, which can provide a basis to understanding the maintenance of cooperation within a population (Santos et al 2006b).
geodesic/path length (L)	The number of connections (edges) linking individuals to each other along the shortest route.	Able to predict the speed at which information or disease can spread through the population. Low L = high speed of spread (Watts and Strogatz 1998). Individually, a short path length indicates an animal with a central position within the network and who might have an influential role to play in information transfer (Lusseau 2007).
weighted path length	The weighted path length takes the shortest path between pairs which has the strongest weighting.	Provides a measure of the distances between individuals accounting for repeated interactions. The spread of certain types of social information, which requires proximity and time can be influenced by the weighted path length (Voelkl and Noë, 2010).
association strength (AS)	The average weight of individual associations giving an indication of persistent pair-wise interactions.	Could imply the existence of reciprocal altruism. Individuals with high AS are able to form cooperative partnerships ensuring the persistence of cooperation within the population (e.g Croft *et al.* 2006a.).

within a group have the opportunity to interact. The gambit of the group assigns an association score for all individuals found together in a group. Initially, this method was utilised to understand marine mammal social networks which are difficult to find and follow.

Various indices have been developed to help acquire information when individuals interact in groups of various sizes (Newman 2001); when individuals differ in their conspicuousness within the population (Simple Ratio Index) or when certain individuals are more likely to be seen when they're in a particular group together (Twice Weight Index) (Cairns and Schwager 1987). From this information, models and statistical tools are used to describe the nature of interactions within the network, how individuals are positioned and the overall structure of the group.

Using the tools of SNA, researchers have uncovered interesting similarities in many diverse networks. One widely seen network structure is that described by Watts and Strogatz (1998) as the "small-world" network. A common assumption in network modelling, prior to their paper, was that network patterning was regularly or randomly structured. The regular network structure comprises high mean clustering coefficient (C) and high path length (L), which increases linearly with n. Random graphs, conversely, tend to consist of a small overall C and small L, which increases only logarithmically with network size. The authors suggested that this might lead to the erroneous view that large C might always be associated with large L. They showed that relatively small changes in edge connections, producing a structure which is intermediate to regular and random patterns, alters this perceived association and with it the functioning of the network as a whole (figure 1.3.1). The few small changes to edge connections in the regular graph, linking vertices which are relatively distant to each other within the network, significantly altered L but C remained relatively unchanged. These "small-world" networks, therefore, are highly clustered (high mean C)

with a few long distance connections, reducing the overall network path length (low mean L).

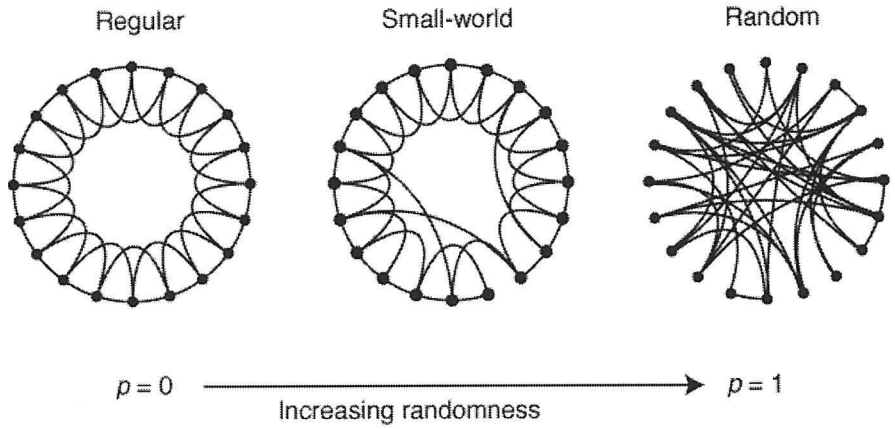

Figure 1.3.1: representations of network patterns with increasing amounts of disorder of node connections, highlighting the small changes in path length required to create a "small-world" network from a regular one.
Reprinted by permission from Macmillan Publishers Ltd: [NATURE] (Watts and Strogatz), copyright (1998).

With this change in association between L and C comes a change in functioning of the graph from those of regular and random networks. These "Small World" networks are expected to be susceptible to disease and unlikely to allow the emergence of "tit-for-tat" cooperation (Watts and Strogatz 1998). This small-world structure is a common feature in real world networks and can be seen in diverse networks such as the neural network of the nematode worm (*Caenorhabditis elegans*) (Watts and Strogatz 1998); the Indian railway network (Sen *et al.* 2002) and the wild Trinidadian guppy social network (Croft *et al.* 2004b).

Another common pattern is that of degree correlation where an individual is connected to others which are either as gregarious as itself within the network (positive degree distribution) or else with individuals with dissimilar degree (negative degree distribution). Newman (2002) suggested that a common pattern in social networks was that of positive degree correlation, whereas negative correlations were more often seen in biological and technological networks.

Assortative degree correlation is expected to produce an environment which could provide a "reservoir" for disease epidemics but is relatively resilient to removal of particular individuals (Newman 2002). Whereas a dissassortative structure in a network may allow for the persistence of cooperation (Rong and Wu 2009) but may suffer disruption from removals of highly connected individuals (Newman 2002). It may also promote swift movement of infection or ideas within the network (Newman 2002, Croft *et al.* 2005), but might not harbour disease.

A common theme across many networks is that individuals interact according to particular attributes. In humans this has been seen according to race, age, gender and education to name a few (reviewed in McPherson *et al.* 2001). Homophily in humans influences the patterns of crime, as well as transfer of information and marriage. Work on the structure and functions of social interactions in marine mammals (Lusseau, 2003) and freshwater fish (Croft *et al.* 2004b) has also found that they are made up of non-random clusters and pairings. In both species this is mostly between females, which has major implications for behaviours such as co-operation and learning. Since particular roles within networks are identified with certain network positions (large degree is associated with global influence across the network, whereas degree strength suggests local influence (Hanneman and Riddle, 2005)), any change to network structure will affect the way these roles are implemented and perhaps by whom.

1.3.1 Recent applications of SNA on animal populations

Common patterns in networks, described in the previous section, have been shown in the various studies describing the social networks of animal populations. Particular individuals within several animal populations have been shown to perform certain roles, which affect the network structure and its interactions. In meerkats (*Suricata suricatta*), the presence of dominant females has been shown to produce networks where grooming interactions are more widespread

(Madden *et al.* 2009). In pigtailed macaques (*Macaca nemestrina*) dominant individuals have been found to police conflict, which maintains social stability of a wide group of individuals (Flack *et al.* 2006). Information about particular circumstances may be held by certain individuals due to their position within the network. Lusseau (2007) suggests that particular individuals within a bottlenose dolphin network (*Tursiops sp.*) held a central position which provided information on fixed foraging patches which had been recently visited and therefore were potentially less profitable. These individuals were able to direct the foraging group they were in, using short-range signals. Fright reactions in African elephants (*Loxodonta africana*) were more appropriately directed in families with older matriarchs. McComb *et al.* (2001) suggested these individuals had developed a greater ability to discriminate between the calls from other families with which they formed either close or distant associations.

The removal of key individuals has also been shown to have a significant affect on group structure and interactions within. Flack *et al.* (2006) showed that by removing particular individuals, which formed policing duties, the networks destabilised. Smaller, more assorted groups were formed, with fewer connections to other groups within the network. The structure of a killer whale population in the northeast pacific consists of matrilineal groups (which had differing positions within the network) connected by particular individuals, often juvenile females (Williams and Lusseau 2006). The authors showed that targeted removal of individuals based on historic captures was able to break up the network into small groups, whereas random removals had no such affect.

Assortment, according to various attributes of the individuals within networks, is a common phenomenon and is often seen according to sex (Croft *et al.* 2004b; Fischoff *et al.* 2009) but also in size (Croft *et al.* 2005). Variation in network interactions has been shown to correspond to ecological or environmental conditions such as parasite load in wild meerkats (Madden *et al.* 2009); potential drought conditions in the African buffalo (Cross *et al.* 2006) and male

harassment in the guppy (Darden *et al.* 2009). Individuals from within the same population have also shown different network structures according to their habitat (Wisniewski *et al.* 2009) or the time of year. In many animals males and females interact more frequently and for longer with the onset of the mating season, showing structural changes in their networks, for example in the Tasmanian devil (*Sarcophilus harrisii*) (Hamede *et al.* 2009).

Many questions have been elucidated using network techniques. The movement of information and disease has been illuminated by theoretical papers looking at the effect of various network structures, such as positive and negative degree correlation (Newman 2002) and by using models of actual animal movements. Cross *et al.* (2004) studied the potential effect of African Buffalo network structure on the transmission of disease. They found the clustered but dynamic structure of this network allowed for the relative ease of disease transmission under certain environmental conditions. Much theoretical work using various models has also looked at the evolution of cooperation and its maintenance in terms of different network structures and dynamics. Networks are expected to promote the occurrence of cooperation if there is high clustering and low connectivity (Ohtsuki and Nowak 2007; Ohtsuki *et al.* 2006) unlike small-world networks whose connectivity is relatively high (Watts and Strogatz 1998). Degree assortment is expected to inhibit the persistence of cooperation within a scale-free network, due to large hubs of interconnected individuals (Rong and Wu 2009). Brede and Sinha (2005) suggest that disassortativeness is prevalent in biological systems because evolution has driven them towards homeostasis. The opposite also follows. As social networks are commonly found to have positive degree assortment (Newman 2002) they are likely to be more in a state of flux. This would allow for influences such as novel information or individuals to integrate into the network.

Studying the nature and stability of interactions within animal populations is vital to understanding the dynamics of important

processes within animal societies. As many animal populations interact in a non random manner it is likely that individuals will experience different social environments, providing differential success within a population. The importance of individuals in terms of particular roles and certain positions within networks naturally leads to a need to understand the relationship between network measures and individual phenotypes within. This is especially the case for the relatively plastic and yet often highly inter-related behavioural phenotypes. Bold and shy phenotypes have different ways of behaving, interacting and learning which may alter their positions within the network and the associations surrounding them.

1.4 Behavioural phenotypes

A behavioural phenotype is the way in which an individual reacts in a single behavioural context which is stable over time and/or situation. Within the population, individuals show variation in this consistent behaviour, forming a continuum of expressed behaviour. Individuals maintain their rank along this continuum in relation to their behavioural type, such that shy individuals are always the shyest in response to a particular risky behavioural context in comparison to bold individuals. This variation within populations has previously been thought of as behavioural noise surrounding an adaptive, optimal mean (Dall *et al.* 2004). Optimality has been a major theme in behavioural ecology, with focal behaviours being measured and subjected to scrutiny in comparison to the best possible solution. However, many trade-offs exist in nature, demanding a balance between traits, thus affecting the ability to reach an optimal level (Sih *et al.* 2004). If behavioural phenotypes are as ubiquitous as recent research suggests then behaviour should now be viewed across contexts and situations. Optimality could be reached despite a behaviour, viewed in a single context or situation, being obviously sub-optimal (Sih *et al.* 2004).

Individuals are expected to alter their behaviour in response to external and internal changes within the limits of behavioural reaction norms BRN (Dingemanse *et al.* 2010a). Differences in state are accounted for within the limits of each reaction norm and beyond this changes in environmental conditions can be seen within the limits of the population's BRN, each population with a potentially different set of BRN limits. Intra-individual as well as inter-individual variation is therefore measured as meaningful. In order to measure an individual's position along a behavioural trait continuum, however, it is important to control or account for those aspects which could have a particular affect on behaviour, such as hunger level. This would provide a non-biased baseline for each individual. However, limited plasticity can be selected for in certain circumstances despite the fact that it may produce sub-optimal behaviour in some contexts. The lack of complete or timely information about the environment may result in the best option being reduced plasticity (McElreath and Strimling 2006). When prey has poor information about the presence of a predator its best option would be to act as though it were under continual threat, rather than attempt to alter its behaviour according to the information it has. Individuals may, therefore, adhere to behavioural rules (such as a general emotional response) which work well across similar types of environments (Dall *et al.* 2004). Fraser and Gilliam (1987) found that guppy tenacity was unaltered (testing in the presence and then absence of a predator) in fish from sites where predation was constant but much reduced in sites where predation was infrequent. Sih *et al.* (2004) go further in suggesting that if individuals reduce the cost of plasticity by choosing habitats they do well in, this may lead to behavioural specialists. This individual x environment correlation may stem from a gene x environment correlation, which may be of evolutionary significance according to Dingemanse *et al.* (2010b). In particularly dynamic environments this "specialisation" may allow individuals exhibiting intermediate rank of a syndrome to be the fittest in overall terms. These individuals may never exhibit

reproductive superiority in any one circumstance, but overall prove to be the most successful (Both *et al.* 2005).

The major importance of consistent behaviour in terms of evolutionary consequences, however, comes from the correlations between behaviours forming behavioural syndromes. These syndromes, apparent between individuals within populations and independent of state is found in various taxa such as fish (Huntingford, 1976; Wilson, 1993 and Bell, 2005), birds (Verbeek *et al.* 1994 and Duckworth, 2006), invertebrates (Reichert and Hedrick, 1993 and Sinn *et al.* 2006) and mammals (Blumstein *et al.* 2006 and Reale and Festa-Bianchet, 2003). Behavioural syndromes link behaviours across contexts and over time, further impacting on an individual's ability to react in an optimal manner. However, when viewed over time or situation instead of in isolation, an individual's behaviour may be appropriate. Certain behaviours might, in fact, be seen to be adaptively correlated such as between extroversion and neuroticism in reproductive success in Australian women studied by Eaves *et al.* (1990). An indication that this might be the case in non-humans is the particularly common behavioural correlations found across various taxa. One such syndrome is the bold-shy continuum.

The bold-shy continuum has been measured under various conditions involving risk, the reaction to which has been seen to be a clear source of intra-specific variation in human and other animals. Linked with many other traits it appears to be a major behavioural dimension and is seen to be one of the most important and stable in human personalities (Kagan *et al.* 1988). In non-human animals boldness has been found to positively correlate with dispersal (Dingemanse *et al.* 2003); exploratory behaviour; (Verbeek *et al.* 1994) and aggression (Riechert and Hedrick 1993). These correlations appear to be equivalent to the syndrome described by Koolhaas *et al.* (2001) seen in laboratory populations of rats and mice, which they have entitled the reactive-proactive syndrome. Proactive animals were aggressive; easily formed routines; defensively buried an electric prod when shocked and relied on feed-forward information (previous

experience) to guide their behaviour. The reactive animals were less aggressive; froze in response to an electric shock; relied on feedback information and so were more flexible to environmental change.

Recent theory suggests the evolution and maintenance of the bold-shy personality traits is due to variation in life-history (Wolf *et al.* 2007). The different priorities (current or future reproduction) encourage different, consistent reactions to risk in order for individuals to access resources, in line with their strategy. A similar theory suggests differences in growth rates encourage correlated behaviours (Stamps 2007). Fast growing individuals would benefit from risk-taking to access resources, breed sooner and produce more offspring in a shorter time period. These individuals will trade-off the risk of mortality which accompanies such behaviour.

There have been a number of explanations as to the causes of how consistent individual differences in behaviour might exist. Correlations in behaviours across time can be caused by genes, hormones or experiences or a combination of all three (Veenema *et al.* 2005). Heritability of particular traits has been shown in various taxa such as in dumpling squid (*Euprymna tasmanica*) antipredator behaviour (Sinn *et al.* 2006) and exploration in great tits (Parus Major) (Dingemanse *et al.* 2002). As is often the case with natural systems, there are probably a suite of causes involved. The endocrine mechanisms underpinning the fear response of the proactive/reactive syndrome in rats has been investigated using the electric prod stimulus context. There appear to be several hormones involved. Overall, the response of burying, exhibited by proactive animals, was accompanied by high levels of plasma noradrenaline but low plasma adrenaline and corticosterone levels. The reactive types (freeze reaction) showed almost the opposite of this (Koolhaas, *et al.* 2001). There have been some baseline variations in hormone levels correlated with behaviour type also (see Koolhaas *et al.* 2001 for a review). Sih *et al.* (2004) suggest that altering the level of hormone may be more effective at changing the timing of the syndrome, whereas a change in receptors might affect the trait itself.

Parental investment can have major influences on the development of the behavioural phenotype of the offspring, as it can impact on growth in early ontogeny. Prenatal under-nutrition (first 95 days of the 147 day gestation) in sheep affected the offspring's behavioural type, with both sexes showing an increased latency to approach a novel object and increased activity during restraint (Erhard *et al.* 2004). The parents' own behavioural types have been shown to affect their ability to rear their young. Both *et al.* (2005) found that slow exploring females (shy) or fast exploring (bold) males produced more and larger young and young in better condition respectively. The interaction between the behavioural types of both parents was also influential depending on the environment. Sinn *et al.* (2006) found assorted pairings between bold or intermediate dumpling squid were successful as were shy females paired with males of any behavioural type.

As experience can influence its behavioural type, so can an organism's type affect the experiences it has. Either in terms of the environment it chooses to inhabit (e.g. bold individuals were more likely to disperse, Dingemanse *et al.* 2003, Fraser *et al.* 2001 and more likely to utilise riskier habitats, Wilson *et al.* 1993, Boon *et al.* 2008) or in terms of its reactions to others. How an individual's immediate and wider social environment impacts on this behaviour and how, in turn, an individual's own behaviour can affect the group(s) in which it lives, is of major ecological and evolutionary importance. The composition of behavioural types in populations will have undoubted implications on individual grouping decisions and the formation of stable pairings of conspecifics. A group is then expected to react differently in various behavioural contexts such as foraging and predator avoidance depending on its behavioural type mix (Sih and Watters, 2005).

1.4.1 behavioural types, grouping and social networks

Individuals exhibiting alternate behavioural types interact within and between groups differentially. Bold sticklebacks appear to spend less

time within a shoal than shy; shy fish are more likely to shoal (Ward *et al.* 2004a). This may influence the choice to shoal with particular behavioural types. Ranta *et al.* (1993) used an altered information-sharing model to test when it would be beneficial for an individual to forage alone rather than in a group, when it has disproportionate access to sharing a food patch. The outcome of the model was that individuals are likely to group with others of similar competitive ability. This may well be linked with other phenotypic traits such as size and bold/shy behaviour and could go some way to explaining the phenotypic assortment often seen in shoaling fish. Magnhagen and Staffan (2005) suggested it was the superior competitive ability of bold perch (Perca fluviatilis) which influenced the reaction of shy fish towards foraging in a group. The shy fish, which had previous experience of being housed with bold fish, showed no increase in feeding, despite spending more time in the open. Due to the range of correlations shown to be linked to boldness and shyness (e.g. aggression – Huntingford 1976; parasite load and habituation - Wilson 1998; dispersal - Fraser *et al.* 2001; foraging under risk – Johnson and Sih 2007) it might be expected that certain social positions would be inhabited differentially by the different behavioural types.

Within a group superior foraging positions are likely to be occupied by the most dominant animals. Whereas other factors change with an altered position in the group (e.g. hunger), individual dominance ranking tends to remain the same (Krause and Ruxton, 2002). The spatial position of an individual within a group will influence the costs and benefits of grouping. For example, in a study on barnacle geese Black *et al.* (1992) found that the best foraging was at the edge of a flock. Geese at the edge receive more food per peck due to increased biomass of the grass there. However, their position on the periphery brings with it a higher risk of predation. In the barnacle geese individuals at both the edge and central positions had similar energetic costs. This is perhaps also the case for network position and certainly those individuals, known to be dominant, have

particularly well connected positions in certain social groups (e.g. Flack *et al.* 2006).

Individuals are part of a network of inter-individual associations that vary in strength, type and dynamics. Two recent studies have shown that social networks in two freshwater fish species are assorted, to some degree, according to individual behavioural phenotype. The first was a laboratory-based study on sticklebacks which showed that shy individuals had stronger but fewer interactions than bold sticklebacks, which were more gregarious (Pike *et al.* 2008). The second study focussed on a wild population of wild Trinidadian guppies and showed that strong ties between individuals were positively assorted according to behavioural phenotype. Negative assortment was made up of weak associations (Croft *et al.* 2009).

Individual behavioural types differ in how they react to social experiences. Frost *et al.* (2007) found that bold Rainbow Trout (*Onchorhyncus mykiss*), which either lost a fight or watched a shy demonstrator respond to a novel object or food, became shyer in the respect that they increased their latency to approach a novel object. Bold great tits (*Parus major*) took longer to recover from defeats in fights than did shy. The shy managed to move up dominance rankings by fighting previously dominant individuals who had undergone a major defeat (Verbeek *et al.* 1999). The experience of increase competition for food slowed the feeding rate of shy perch even after they had moved to group with all shy members (Magnhagen and Staffan, 2005). These differential social experiences could influence their choices of partners, altering the structure of the population. Wilson *et al.* (1993) found that bold and shy pumpkinseed sunfish (*Lepomis gibbosus*) frequented differing habitats within the same population. The bold found in deeper waters than the shy, also had different parasites and fed on different proportions of prey species. This segregation is likely to produce differential interactions between individuals brought about by passive assortment according to habitat preferences. However, avoidance of individuals with more or different types of parasites (Dugatkin *et al.* 1994b), and preferences for those

with similar diet and recent experience of a similar habitat (Ward *et al.* 2004b) has been shown to influence individual preferences which point to active assortment within populations. Croft *et al.* (2003a) suggested that individuals might be passively segregated by habitat on a medium spatial scale but actively by fission-fusion process at a smaller scale in guppy shoals.

The behavioural type mix has also been shown to have a profound affect on the group outcomes. For example, mating behaviour was found to be drastically reduced in groups consisting of hyper-aggressive male water striders, as the females in the group chose to spend time in the environment non-conducive to mating (Sih and Watters 2005). More fish fed in mixed groups of bold and shy guppies than in homogeneous groups of either type (Dyer *et al.* 2009). They relate this to a producer-scrounger scenario, as they found that shy fish tended to follow bold fish, which discovered a novel foraging patch. Dominant individuals are related to scroungers in producer-scrounger systems as they will use their status or size to acquire resources from the producer. However, it is unclear where, in producer-scrounger systems, the bold individuals are positioned (Coleman and Wilson 1998). Bold individuals have been found to be aggressive (Huntingford, 1982) but also quick to feed on novel food (Wilson *et al.* 1993). Dingemanse (2003) found boldness linked to dominance in territorial adult male great tits (*Parus major*) but the opposite in non-territorial juveniles when fed at clumped feeding tables. He suggests that the relationship between behavioural type and dominance is therefore dependent on the individual's state and the type of food availability.

These non-random associations have important implications for many aspects of an animal's life and especially for communication and social learning. This in turn will affect an individual's capacity to build familiar and therefore, cooperative relationships; respond to novel environments and foraging patches and choose mating partners. Social learning occurs with the acquisition of a new behaviour or information by observing or interacting with others. The opportunities

for social learning will be influenced by the non-random social structure of the population. Clusters and stable pairings, for instance, will reduce or slow down the transmission of information and abilities to learn from others would be limited (Coussi-Korbel and Fragaszy, 1995). The chances to learn depend not only on the opportunity but also the ability, both of which can be influenced by the individual's behavioural type. Studies have shown that behavioural types differ in the speed and manner in which they learn. Various reports show that individuals, which are described as reactive, fast explorers or bold, were quick to form routines and tried to alter their environment (Koolhaas *et al.* 2001); slow to accommodate changes in their environment (Verbeek *et al.* 1994); but learnt more quickly from a tutor (Marchetti and Drent, 2000) and learnt an associative novel foraging task quickly (Dugatkin and Alfieri 2003). Shy individuals appeared more in tune to subtle environmental changes and did not alter their behaviour in response to a tutor. Sih *et al.* (2004) suggest that by linking the two opposing views regarding personality and learning, bold individuals might be expected to learn novel tasks better and shy individuals might be better at sensing environmental changes within a familiar task. In their study on the transmission of foraging information in guppies Lachlan *et al.* (1998) suggested that erroneous or no longer relevant information could also be learned and suggested that the ability to seek out successful demonstrators might reduce this shortcoming. However, if bold and shy individuals socialise and learn in different ways, could this impact on the type of information they possess and transfer within a population?

Stable pairs are one of the main conditions required for the evolution of cooperation and especially reciprocal altruism (Trivers 1971). If individuals of differing behavioural phenotypes interact with others within their social environment differentially, as has been discussed, could this impact on their ability and/or likelihood to cooperate? Certainly, inspection behaviour differs according to sex as female guppies are more likely to cooperate than males (Magurran and Nowak 1991), a likely result of their differing life history priorities.

They also form stable partnerships in the wild (Croft *et al.* 2004b). Inspection behaviour does vary amongst individuals also and is commonly used to ascertain the behavioural type of an individual. Several studies have reported cooperation in predator inspection including Dugatkin (1988) who showed that predator inspection was shared by the individuals involved, thus reducing the risk for all inspectors. Could cooperation during inspection differ according to distribution along the bold-shy continuum? Bergmüller *et al.* (2010) acknowledge that the consistent variation in cooperation could be related to bold and shy behavioural types, and suggest there may be evidence of a positive relationship between shyness and cooperation in the cleaner wrasse (*Labroides dimidiatus*). According to McNamara *et al.* (2004) and McNamara and Leimar (2010) the maintenance of variation in behavioural types might itself lead to the evolution and stability of co-operation. Variation is expected to promote choosiness in cooperative game players and, once markets are established, the maintenance of a reputation will support cooperation.

The relative fitness of an individual in one context has been shown to change in another dependent on its behavioural type (Dingemanse *et al.* 2004). Behavioural ecology has traditionally taken the average behaviour within a population. The differences in ability to cope with challenges will determine the population structure by way of differences in survival, dispersal and reproduction. These will affect the frequency of different behavioural types as well as the population's genetic structure. Sokolowski *et al.* (1997) found that when their laboratory populations of Drosophila larvae reach a particular density the fitness landscape altered to favour one behavioural type over another. The larvae with a long path length were selected for under high densities and short path length in low densities. Concepts such as community ecology and niche partitioning will be affected by the interactions between behavioural types which vary at the species level (Bell, 2007). Variation in behavioural phenotype might also be maintained by frequency-dependence and costs to flexibility (Dall *et al.* 2004). Different strategies allow

individuals to balance out the differing tradeoffs each of them will experience due to variations in state/size/energy reserves etc. Frequency-dependence may be one route to alternative, yet equally fit, personalities emerging in a population. It depends on the ratio of individuals in the population that are behaving in the same way and the fitness landscape of alternative strategies (i.e. the Hawk-Dove model) Maynard-Smith (1982).

1.5 *the guppy as a model system*

The guppy has been a popular model system in ecology and evolution for many decades, providing valuable insights into wide-ranging subjects such as sexual selection (reviewed in Houde 1997), the various affects of predation (reviewed in Magurran 2005), the development of familiarity and cooperation in predator inspection and, most recently, in the intricacies of population social structure (Croft *et al.* 2004b, Croft *et al.* 2005).

Guppies live in dynamic societies with small inter-shoal distances and high rates of fission-fusion events (Croft *et al.* 2003a). They have a non-resource based, promiscuous mating system, where males prioritise the acquisition of a variety of partners (Magurran and Seghers, 1994a; Endler 1983). Females, as well as prioritising feeding and safety, exhibit choosiness in mate acquisition, which has been shown to work at various levels from the active receptivity towards colourful males to cryptic choice post-copulation (reviewed in Magurran 2005). Male and female guppies show sexual dimorphism; in particular, males are highly coloured and much smaller than the plainer brown-grey females. Male body colouration can be enhanced during displays to a female, which involves the male posturing in an "S" shape directly in front of a her (Baerends *et al.* 1955). This colour has been shown to be linked to differential mating success between males (Endler 1980 and 1983; Houde, 1988). Whereas in females it is

body size which is related to fecundity, with fecundity generally increasing with an increase in body size (Houde 1997).

Physical (Endler 1980) and behavioural phenotypes (Seghers 1974; Magurran and Seghers 1994a) as well as life histories (Reznick and Endler 1982; Reznick *et al.* 2004) and many other aspects of guppy life have all been shown to differ in accordance with different levels of predation. Guppies live in environments which vary in the level and type of piscivorous predators present (Magurran 2005). Predation is, undoubtedly, a major selective force on guppy populations. However, some of these differences might be due to a combination of predation levels as well as other important environmental factors. For instance, food availability appears to co-vary with predation risk due to variation in canopy cover, with low predation localities generally having higher canopy cover and lower productivity (Grether *et al.* 2001).

Behavioural differences are well known between the sexes in guppies. Amongst other things, males spend less time foraging (Magurran and Seghers, 1994b) and shoaling (Seghers, 1974) and their priority is acquiring matings (Magurran and Seghers, 1994b) with novel females, showing a preference for unfamiliar females (Kelley *et al.* 1999). Females have been shown to prefer familiar individuals (Griffiths and Magurran, 1998), exhibit stable partnerships (Croft *et al.* 2004b) and site fidelity (Croft *et al.* 2003c). Due to differences in reproductive strategies, leading to sexual conflict, males and females guppies show sexual segregation (Darden and Croft 2008). Persistent social interactions within the shoal and the wider population have also been shown to be female-biased (Croft *et al.* 2004b).

The known preferences for partners in terms of familiarity; the cooperative behaviour (Dugatkin 1988, Dugatkin and Alfieri 1991) and the non-random assortment according to behavioural phenotype (Croft *et al.* 2009; Pike *et al.* 2008) makes this species a particularly interesting one in which to investigate the nature of behavioural types within social networks. An understanding of how guppies interact

socially, how interactions may be acquired and how these interactions are affected by predation will enhance work already carried out on familiarity, the effects of predation and the influence of males on females within the population.

1.6 *Thesis aims and chapter layout*

The aims of this study are two-fold. Firstly, using Social Network Analysis, I investigate the influence of behavioural type on guppy social systems in terms of female network position and structure. I then quantify the effect behavioural type has on partner choices made by both sexes. Secondly, I measure the consequences of external and internal forces on social interactions and growth of female guppies.

Chapter 2 compares several common methods of defining associations within networks, with the intention of showing the importance of choosing the method most appropriate to the study. In terms of the networks in this study and in this thesis as a whole the Newman corrected method was appropriate, as it provides association matrices which are strongly correlated with those produced by the nearest neighbour and therefore able to provide fine-scale information about repeated networks.

The importance of social interactions and the structure of social groups will affect an individual throughout its life and, in social animals, in all its interactions. Quantifying how these interactions are structured and what might influence them is an important route of research. The use of SNA has highlighted the importance of individuals within societies and has shown that certain individuals can have a major role on group behaviour. The combination of SNA with the study of individual behavioural phenotypes has already been successful in describing social assortment and positioning in a wild guppy population and in several, replicated lab-based stickleback networks. In chapter 3 and 6 I quantified interactions within replicated semi-natural networks of female guppies of known behavioural

phenotype. The intention is to ascertain whether an individual's behavioural type was related to her position within the network. The position of individuals in relation to others of differing or similar type will influence their social environment. If particular roles exist, which direct group behaviour, the holder of these positions could alter the trajectory of the group, depending on their behavioural phenotype.

In chapter 3 I also quantify the influence predation levels have on social structure, by providing half of the 16 networks with a simulated predatory event, leaving half as a control. The major implications predation risk has on guppy life have been shown in many different studies over many years. Guppies under high predation levels have been shown to shoal more cohesively; inspect in larger groups and at greater distances and utilise shallower water more than those with little risk of predation.

Previous work has demonstrated that sexual harassment from males can disrupt social structure in female guppies. In chapter 6 I investigate if these reported disturbances affect the growth of female guppies undergoing harassment and whether this differs dependent on female behavioural phenotype. I introduced males into half the networks in this study and small females as a control and measured weight and body length.

The decisions about with whom to shoal have been shown to be influenced by competitive ability, conspicuousness, novelty, quality and cooperative ability to name a few. Bold and shy individuals may be expected to show variation in all of these, thus impacting on the structure of the group and perhaps the network. In light of the many reported consequences of grouping, the choices individuals make with regard to with whom to shoal would be aided by an ability to familiarise. Familiarity has been shown to inform guppies of potential mating partners and cooperative partners. I use two separate binary choice experiments to measure differences in choices according to familiarity and behavioural type.

In chapter 4 I investigate whether females of differing behavioural type showed a difference in their preference for familiar

over unfamiliar females. Bold fish tend to be more active and are less sociable and may, therefore, show less preference or even proficiency for developing familiarity. I also tested bold and shy females for their preference for another bold and shy female with which they had no recent contact, thus negating the influence of familiarity. A recent study has shown that shy behavioural types associated with bold in a novel foraging test (Dyer *et al.* 2009). If this is a common strategy it could influence social network position and network structure.

In chapter 5 male mate choice was measured in terms of behavioural phenotypes of both the male and the female. Males have shown preferences for females on the basis of novelty and size which allow them to direct their matings to quality females with which they have not previously associated. Bold and shy males are expected to discriminate differently due to their reaction to risk, as courtship is a highly conspicuous activity which is energetically costly. I investigate male choice using a binary choice test involving a bold and shy female and manipulating the perception of risk using females from the same or different habitats to themselves. Male choice will have major consequences for females in terms of predation risk and social disruption.

Chapter 7 discusses the results and provides an overall summary of their implications for the study of social groups and networks. Further work is then suggested which will aid the understanding of the effect of behavioural phenotypes on animal social networks.

2 Chapter 2

Animal social networks: comparing methods for defining associations in laboratory-based networks

Abstract

Quantifying population social structure is essential for addressing many fundamental hypotheses in behavioural ecology. For many difficult-to-observe animal groups social interactions are inferred based on spatial proximity. The most common approach is to use the "Gambit of the Group" whereby all individuals observed within a group are defined as interacting socially. However, group sizes vary and large groups are likely to comprise of weaker associations overall than individual dyads. Randomisation techniques have been used in the analysis of wild populations which can conserve group size variation but in many small, replicated networks the variation in group size has not been similarly addressed. Here we compare a way of correcting for this group size effect with several commonly utilised approaches. The Nearest Neighbour (NN) approach, scores only the closest pairs, producing a fine-scale representation of associations within a group which provides the standard on which we aim our comparisons. The group size corrected method, termed "Group Association corrected" (GAc), weights the score for pair-wise associations by the size of the group. We use two other group association measures 1. basic Group Association (GA) and 2. Group Association using the Simple Ratio Index (GA-SRI) - observed pairs are scored proportionate to the total number of times they are seen together or apart. Using 16 replicated networks of female guppies (*Poecilia reticulata*), we compared each method using several standard network measures. We found that correcting for group size provided the closest representation to the NN in the patterning of associations, although this similarity did not translate to similarity in the standard network measures. Due to the particular way edges are weighted by GAc, this method produced highly correlated association matrices providing a description of associations which is more representative of biologically relevant social interaction patterns.

2.1 *Introduction*

There has been a great deal of recent interest in the application of social network analysis to quantify the social organisation of animal populations (Wey *et al.* 2008; Krause *et al.* 2009; Sih *et al.* 2009). The local and global social structure of populations has implications for several fundamental themes in ecology and evolution such as population genetic structure (Matocq & Lacey 2004; Wolf & Trillmich 2008), frequency dependent selection (Nowak & May 1992; Lieberman *et al.* 2005), the evolution and maintenance of co-operation (Ohtsuki *et al.* 2006; Santos *et al.* 2006), the way populations exploit their environments (Hoelzel 1993; Baird & Dill 1996) and the transmission of information and disease (Watts & Strogatz 1998; Cross *et al.* 2004). Social Network Analysis (SNA) provides a framework for describing social structure at different levels of organisation and for investigating social dynamics which have implications for many important processes in animal life (Krause *et al.* 2007).

To construct a social network we use data on the frequency and distribution of social interactions between individuals. For many species it is often difficult to observe direct behavioural interactions that underpin social structure, prompting the use of general descriptions of associations (Whitehead 2008). The most commonly used method of defining associations for group based data is the "Gambit of the group" (Whitehead & Dufault 1999). All individuals within a group are given an equal association weight. Group membership is used as a proxy for relationships between individuals and has proved to be a very useful method for by-passing the need to observe actual interactions (Whitehead & Dufault 1999). In fact, Whitehead (2004) suggests that collecting association data at the group level can be preferable, rather than being inferior to individual interaction data, as it give results which can be useful across a greater

range of research questions in species where direct observations of behavioural interactions are difficult.

We term the definition of association using the Gambit of the group the Group Association (GA) approach, which assumes all grouped individuals are associating, independent of group size. However, group size is likely to be an important factor determining the strength of this relationship which we may expect to decrease with an increase in group size (Newman 2001; James *et al.* 2009). In nature, group size is variable; its distribution tends to adhere to a power law relationship (Krause & Ruxton 2002). Research on wild animal populations tends to include randomisation tests (able to conserve properties such as group size and recapture frequency) to explore the significance of social relationships between individuals (Hoare *et al.* 2000; Ward *et al.* 2002; Lusseau 2007). Recently, researchers have applied SNA to laboratory-based, replicated populations comparing networks between different treatments (Thomas *et al.* 2008) or investigating how network structure relates to a particular behavioural trait (Pike *et al.* 2008) or process (Morrell *et al.* 2008). Comparisons between network parameters across these replicated networks have rarely considered the potential effects of group size (exceptions are Newman 2001 and Darden *et al.* 2009).

The aim of this study is to evaluate different approaches for assigning associations using group based data, assessing comparability to the fine-scale association data supplied by the nearest neighbour methodology. To the best of our knowledge no previous study has quantified the extent to which group based definitions can predict the finer scale patterns of association observed within groups.

Using data from the social networks of 16 groups of wild caught guppies (*Poecilia reticulata*), we compare network structure using a number of different methods for defining associations: *1)* Group Association (GA) – described above; 2*)* Group Association - Simple Ratio Index (GA-SRI) – accounts for the fact that not all individuals are seen per sampling period and 3*)* Group Association

corrected for group size (GAc) - correction for group size variation using the method proposed by Newman (2001). All three are then compared to *4)* Nearest Neighbour (NN) - directed data of only the nearest individual per sampling event.

The more detailed representation of association preferences provided by NN is commonly unfeasible for studying many animal populations for various reasons (e.g. accessibility, time limitations). A group-based methodology with values akin to those of the NN approach would be useful for the analysis of small replicated social networks that are typical of the semi-natural and laboratory studies previously mentioned.

2.2 METHODS

The study was carried out from April to May 2008 using wild-caught guppies from the lower reaches (high predation area) of the Aripo (N10°40 W61°14′), a river in the Northern Mountain Range, Trinidad. 240 adult female guppies were caught in two-metre seine nets from pools in the river, spaced over a distance of 400m. The network experiments took place in outdoor semi-natural pools (180 cm diameter) containing aged water (14cm depth) and natural algae-coated substrate from the Aripo River.

We established a total of 16 social groups (one per pool) each consisting of 15 adult female fish ($X \pm$ S.D. – length = 29.2±0.7mm, N=16; size range = 9.4±2.0mm, N=16) individually marked using visual implant elastomer (Croft *et al.* 2003c). Previous work has demonstrated that the marking process does not affect shoal choice behaviour (Croft *et al.* 2004b). The fish were left to acclimatize for 28 hours, after which association patterns were documented using a Nikon D40x digital camera held by an observer positioned at poolside. For sampling purposes the pool was subdivided into four quarters (this was delineated using string above the pool). Each quarter of the pool was sampled for a 15 min period during which time social interactions

were quantified once every minute. The observer was never more than 90cm away from any fish entering the quarter being observed. The majority of observations occurred within the wider arc of the quarter. For those associating closer the furthest point of the quarter (towards the pond centre) the angle of observation was accounted for by eye. Social interactions were identified from the photographs and fish were defined as interacting socially if they were observed together within a shoal. Fish were assigned to the same shoal if they were within four body lengths of another; which is within the inter-individual distance that shoaling fish are known to socially interact (Pitcher *et al.* 1983). This definition is commonly applied and has been successfully used to describe shoaling behaviour in guppies (Croft *et al.* 2004b). The depth of the pond was such that individuals at the surface and the bottom were still within the inter-individual interaction distances, mentioned above, and so individual distances were easily measured. No individual was recorded more than once within the same minute and, if seen in two groups during this time, the larger of the two groups was taken, to ensure all individuals which were seen were scored. Once experiments were concluded, the fish were released into a semi-natural pond on UWI St Augustine campus. From the photographs we calculated four different measures of association:

Method 1 - Nearest Neighbour (NN)

Every individual seen in a shoal during a sampling event was given an association score of 1 with the individual fish with which it was closest. Other than in groups of two, an individual's nearest neighbour isn't always reciprocated. For example, in figure 1X, fish 3 has fish 2 as its nearest neighbour, but fish 2's nearest neighbour is fish 1 and vice versa. This results in an asymmetrical matrix (e.g. figure 2.1a) and the accumulation of scores produces a network association matrix which is directed.

X

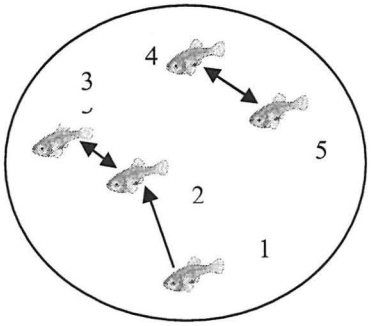

Y

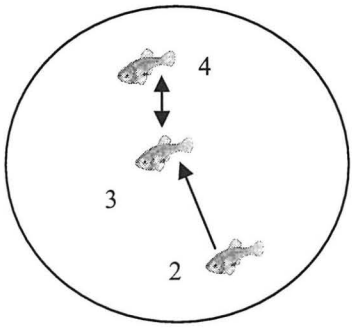

a

	Nearest Neighbour (NN)				
FISH	**1**	**2**	**3**	**4**	**5**
1		1	0	0	0
2	0		2	0	0
3	0	1		1	0
4	0	0	1		1
5	0	0	0	1	

b

	Group Association (GA)				
FISH	**1**	**2**	**3**	**4**	**5**
1		1	1	1	1
2	1		2	2	1
3	1	2		2	1
4	1	2	2		1
5	1	1	1	1	

c

	Group Association – Simple Ratio Index (GA-SRI)				
FISH	**1**	**2**	**3**	**4**	**5**
1		0.5	0.5	0.5	1
2	0.5		1	1	0.5
3	0.5	1		1	0.5
4	0.5	1	1		0.5
5	1	0.5	0.5	0.5	

d

	corrected Group Association (GAc)				
FISH	**1**	**2**	**3**	**4**	**5**
1		0.25	0.25	0.25	0.25
2	0.25		0.75	0.75	0.25
3	0.25	0.75		0.75	0.25
4	0.25	0.75	0.75		0.25
5	0.25	0.25	0.25	0.25	

Figure 2.1: Diagram (and related association matrices) highlighting the differences between the association measures used. Circles X and Y are two separate sampling events for which an association matrix (a-d) is calculated using each of the four methodologies. Directed arrows indicate each fish's nearest neighbour. (a) Nearest Neighbour matrix – a score of 1 is given only for the association between each fish (rows) and its closest neighbour (columns); (b) Group Association matrix - all individuals in each sample are defined as associating and given a score of 1; (c) Corrected Group Association matrix – all fish are given a score corrected for the size of the group (i.e. $1/g$-1). In viewing event X all scores are identical $^{1}/_{5-1}$=0.25; in Y fish 2, 3 and 4 collect a higher score due to a reduction in group size $^{1}/_{3-1}$= 0.5; and (d) Group Association – Simple Ratio Index matrix - A score is given as a proportion of sightings during both sampling events (matrices cannot be calculated for each and then added).

Method 2 – Group Association (GA)

For each sampling event any two fish were defined as associating if they were observed in the same shoal. Using SOCPROG (Whitehead 2007), an association score of 1 was given to all pairs of individuals observed within the same shoal (i.e. for the shoal of five in figure 1X there are ten associations). We used the number of times two individuals were observed together in the same shoal to construct a weighted association matrix (e.g. figure 2.1b) between all individuals for each network.

Method 3 – Group Association - Simple Ratio Index (GA-SRI)

Given that not all individuals were observed on every sampling event we also calculated the strength of association using an association index. As we have no reason to believe there was a sampling bias, we used the Simple Ratio Index (SRI) (Cairns & Schwager 1987).

$$SRI = \frac{X}{X + Y_{ab} + Y_a + Y_b}.$$

Where the number of times two individuals (a and b) are seen together (x) in a group is divided by the total number of times they are seen together (x), apart (y_{ab}) and when either a or b was seen without the other (y_a+y_b). The *SRI* gives indices that are scaled between 0 and 1 (e.g. figure 2.1c) with a value of 1 indicating that the pair was always observed together and a value of 0 if the pair never associated.

Method 4– Group Association corrected for group size (GAc)

As an extension of the Group Association methodology we used the Newman's weighted association index (Newman 2001) where each association score was tempered by the size of the group in which the individuals were observed. The effect is to give pairs of individuals observed in a group of size g a weighting:

$$1/(g\text{-}1),$$

reflecting the fact that a given pair in a small group is likely to be interacting more closely than a pair in a large group. For example in figure 2.1X, guppy 3 will have a score of 0.25 (1/(5-1)) for each association with guppies 1,2,4 and 5, as will the other fish in the group. Across the sampling period these numbers were added to produce a network association matrix (e.g. figure 2.1d) that accounts for group size.

Statistical analysis

Social Network Analysis

To describe the structure of the social networks using the different measures of association we calculated several commonly used network measures, each portraying a different characteristic of the social structure. All analyses were carried out using unfiltered, weighted measures (Lusseau *et al.* 2008). As a global measure of connectivity in the network we calculated the average weighted path length (L) for each network, which is the average of the shortest number of edges between all pairs of individuals, with larger values for weighted edges producing "shorter" distances. As a measure of local connectivity we calculated the weighted clustering coefficient (C), which is a measure of the total number of direct links which exist between the neighbours of a focal individual proportionate to its neighbourhood size and averaged across the network (Hanneman & Riddle 2005). Finally, the coefficient of variation of the association strength (cvAS) (the average association strength value was produced by division of the total number of edges by the number of unique edges linking pairs of individuals) was calculated to give a numerical impression of the social differentiation within each network.

An initial multivariate ANOVA was used to ascertain whether there were any overall differences between the four methodologies. The mean network parameters for each network were used as dependent variables with method as the fixed factor. Post hoc tests were then carried out using separate univariate ANOVAs for each

network measure to investigate pair-wise differences between the methods.

Evaluating the better predictor of NN scores.

Finally, we investigated the extent to which GA, GAc and GA-SRI were able to define the finer aspects of the association structure within groups (measured using the NN approach). For each network we used a Mantel test to correlate the NN association matrix with the GA association matrix to produce a correlation coefficient. We repeated this analysis using GA-SRI and GAc allowing us to compare the mean correlation coefficients (after Fisher's Z-transformation) between NN – GA, NN - GAc and NN - GA-SRI using a paired t-test. This final test allowed us to comment directly on whether the GA, GA-SRI or the GAc gave a clearer representation of interactions that occur within animal social groups (always using the NN data as the reference point).

All social network analysis was done using UCINET 6 for Windows (Borgatti *et al.* 2002) and all statistical analysis was undertaken in SPSS for Windows, (rel.14.0.2, Chicago: SPSS Inc.).

2.3 RESULTS

The group size distribution across all 16 networks ($X \pm$ S.D. = 3.30±1.86; mode = 2; range = 2 – 13 individuals) was similar to the general finding that relatively small groups are much more common (Krause & Ruxton 2002).

Social Network Structure

We observed an overall significant difference in the social network structure between the four different methodologies (GLM Multivariate test: $F_{3,60} = 21.195$, $P < 0.001$) (table 2.1).

Table 2.1: The results of pairwise post hoc univariate ANOVAS (with individual network measures as the dependent variables), investigating the relative explanatory powers of all four methodologies.

Method pairs		path length	clustering coefficient	c. var association strength
GA-NN	*F*	0.001	77.740	5.587
	df	1,30	1,30	1,30
	P	0.919	<0.001	0.025
GA-SRI-NN	*F*	85.694	2.238	2.842
	df	1,30	1,30	1,30
	P	<0.001	0.145	0.102
GAc-NN	*F*	10.162	27.586	9.372
	df	1,30	1,30	1,30
	P	0.003	<0.001	0.005
GA-GA-SRI	*F*	97.267	73.878	16.626
	df	1,30	1,30	1,30
	P	<0.001	<0.001	<0.001
GA-GAc	*F*	10.880	54.265	0.307
	df	1,30	1,30	1,30
	P	0.003	<0.001	0.583
GA-SRI-GAc	*F*	5.117	29.519	24.280
	df	1,30	1,30	1,30
	P	0.031	<0.001	<0.001

GA-SRI and GAc both exhibited significantly larger weighted path lengths than NN (figure 2.2a). This was likely to be due to the low values assigned to each pair association in comparison to NN and GA. The similarity between NN and GA in this measure may be a result of the highly connected nature of these small networks. The weighted clustering coefficient measure differed significantly in all but the comparison between NN and GA-SRI (figure 2.2b).

GA, with its broader group measures, produced higher results for the mean clustering coefficients produced by the other three methodologies, which suggest fish are more connected, due to all associating individuals being given scores independent of the group size.

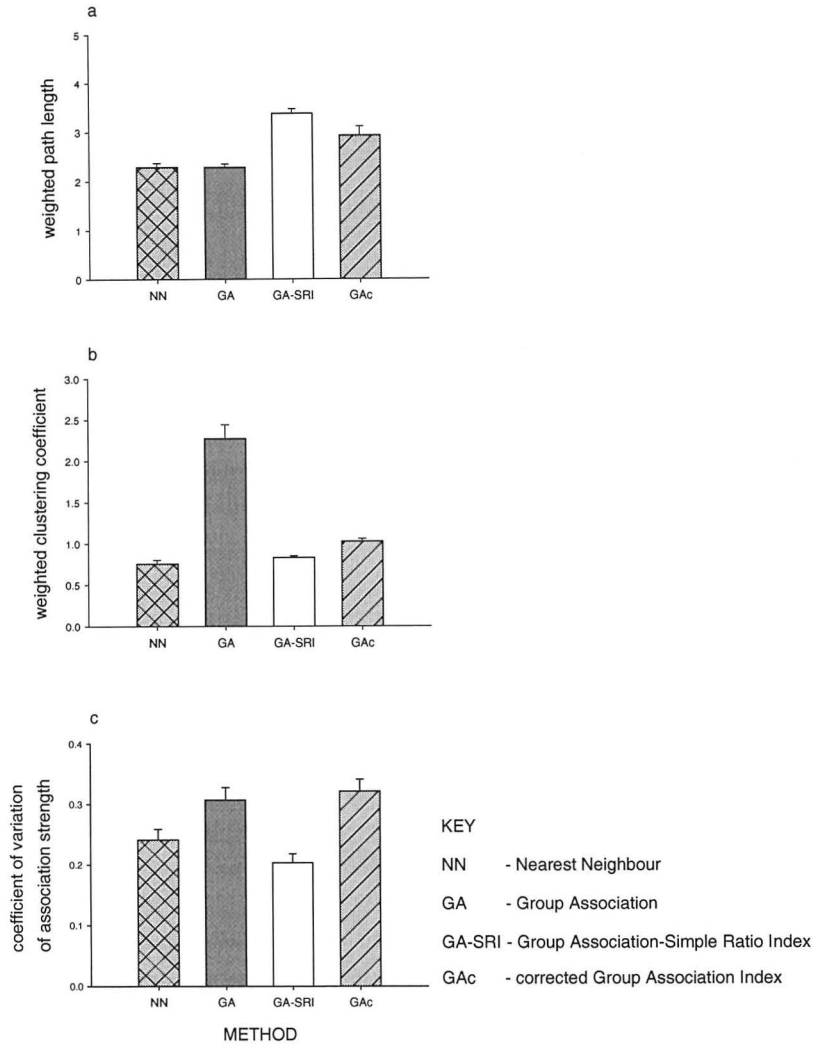

Figure 2.2: Mean (± standard error) a) weighted path length, b) weighted clustering coefficient and e) coefficient of variation of association strength for each of the four methodologies.

In the coefficient of variation measure, GA-SRI showed no significant difference to NN (figure 2.2, c). Both GA and GAc were significantly different from NN but not from each other and showed slightly higher results in comparison.

Evaluating the better predictor of NN scores.

The correlation coefficients (see figure 2.3) of GAc - NN were significantly stronger than GA - NN ($t_{15} = 7.950$, $P < 0.001$) and GA-

SRI - NN (t_{15} = 8.854, P <0.001). GA - NN was significantly stronger than GA-SRI - NN (t_{15} = 4.034, P= 0.001).

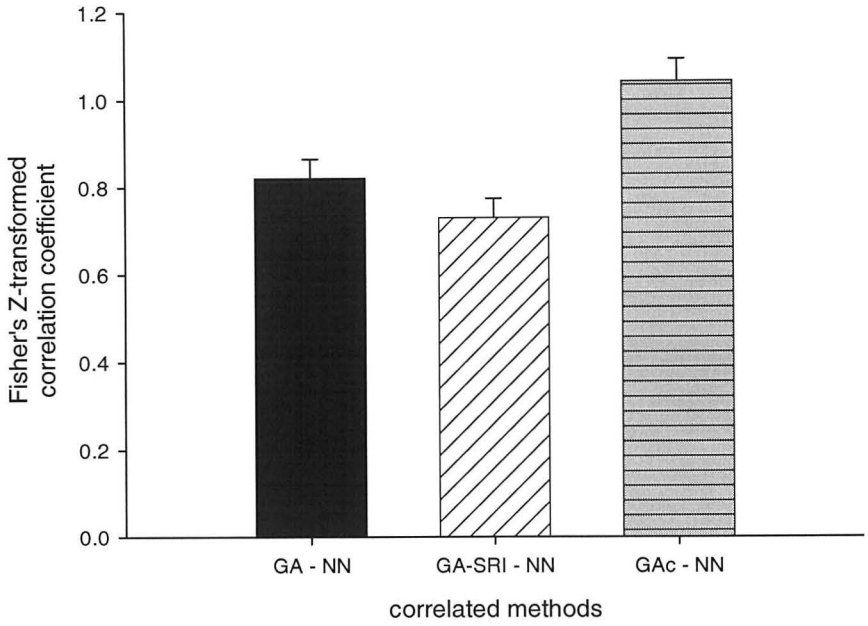

Figure 2.3: Correlation coefficients (Fisher's Z-transformed) showing the covariation of association matrices between each group-based method and NN. GA vs NN (filled); GA-SRI vs NN (diagonal stripes) and GAc vs NN (horizontal stripes).

2.4 DISCUSSION

Correcting for group size produced a distribution of weighted edges in association matrices which was highly correlated to that of the Nearest Neighbour method and more so than either of the other methodologies. Whilst the distribution of the edges was similar the weighting on those edges differed and this resulted in the GAc producing network metrics that were significantly different from the NN method. These results illustrate the importance of considering the method of defining associations in the context of the research question. In this context

correcting for group size provides an association matrix which is similar in structure to that produced using a NN approach. Our results also demonstrate that information on group composition can predict the finer scale social structures within groups (i.e. patterns of nearest neighbours within a group). This result adds further validity in using information on group composition to infer patterns of social interactions that occur within groups.

The majority of recent studies of fission-fusion societies have used the Gambit of the Group methodology (Whitehead & Dufault 1999), valuing associations according to group membership and allowing for relatively straight forward sightings of identified individuals over several viewing periods to be used to build a depiction of their social organisation. James *et al.* (2009) provide instances when this approach can usefully answer questions regarding the biology of the system, such as understanding the transmission rate of air-borne pathogens which spread quickly to individuals grouping compactly. The biological interpretation of data analysed invoking the Gambit of the Group on wild animal networks is usually accompanied by the use of randomisation techniques to establish the significance of observed associations within groups (Christal & Whitehead 2001; Ward *et al.* 2002). These techniques randomly generate data sets, allowing for the retention of important aspects of the original data, such as wide variation in group sizes (Bejder 1998; Whitehead 1999). In recent experimental work on small, semi-natural or laboratory-based, replicated networks the effects of group size variation have not been accommodated, and Newman's argument in his 2001 paper on scientific collaborations (authors working with only one other were more likely to know each other than those in large groups) remains relevant.

In our study we observed clear differences in the social network structure using the different methods for assigning associations between individuals. As expected the GA approach produced highly interconnected social networks that were characterised by high clustering coefficient and low path length. These

effects are driven by the fact that this method assigns associations to all individuals observed in a group with equal weighting, with association values depicting stronger and more comprehensive interactions, the biological interpretation of which might be overstated when group size is large.

The NN approach produced network measures that were significantly different from most other methods. It portrayed less connectedness between individuals and their neighbours by way of low clustering coefficient due to values being of pairwise associations resulting in sparse social networks. The extent to which group-based methods can predict the NN patterns of within group associations has not been previously quantified. More precise information on associations is likely to come from the fine-scale data provided by this methodology. However, to build a complete picture of a complex social network using pairs alone could be at the expense of clearly representing important global community features (Robins *et al.* 2007), which provide the wider social context within which these pairwise associations take place. For instance a true representation of the cliquishness of our network is likely to lie between the values provided by the GA and NN methodologies. It is important to note that the shortest distance between individuals, although important with respect to many biological processes such as the transmission of certain diseases or particular forms of co-operation, might not provide the most appropriate route to explore other aspects of an animal's life, such as communication.

A more general approach such as the GA methodology, using association indices to correct for sampling biases, allows the broad-scale features of the network to be maintained whilst the various indices help to provide clarity at the level of associations; all using data which is relatively easy to collect with little disruption to the sampled population (as recommended in Franks *et al.* 2010). Both association indices used in this study provided finer detail in comparison to the Group Association but in different ways. In terms of explaining the variation in association strength and the clustering

coefficient the GA-SRI method was more representative of NN values than GA and GAc. Greater variation in association strength between individuals within a network was produced by GA and GAc because these methods did not take into account how often individuals are seen. The more often individuals are seen outside their pairing the greater the variation using GA-SRI; the wider the difference in group sizes seen within the population the more reduced is the variation produced by GAc.

Although the GAc did not produce values which differed greatly from the NN in any of the measures (unlike GA for clustering coefficient and GA-SRI for path length) it produced results which were significantly different to NN in all the network measures used in this study. However, the manner in which edges are weighted by the GAc methodology (reducing edge scores for individuals found in large groups) brings the mean association value for GAc closer to that produced by the NN. The GAc, therefore produced the closest representation of the structure of associations within the networks to that given by the NN methodology (figure 3). This may provide a more representative value for measures which rely on the edge distribution as well as the pair association scores, such as the degree correlation. This demonstrates that for a more realistic picture of within-group patterning akin to that provided by the NN methodology corrections according to group size need to be implemented.

Dependent on the question of interest each methodology has its value. For group level analysis such as the pattern of spread of a disease affecting all those individuals seen together (but not necessarily interacting) the Group Association method will clearly suffice (Cross *et al.* 2004). The GAc approach may be particularly important when we are considering behaviours or processes that require close proximity. This method may prove successful as a route to test hypotheses concerning coordination and cooperation within the network (Cassar 2007). It may also allow for a better understanding of many important processes involving the behaviour within the population (such as the nature (Croft *et al.* 2006a) and, perhaps,

evolution of co-operation (Ohtsuki *et al.* 2006)), and the factors affecting the group (for example, the transmission of a disease or information (Krause *et al.* 2007) which requires repeated exposure in order to infect).

Conclusion

Until now a more detailed structural depiction of social interactions within groups has usually relied on more precision in data collection. We have found that more representative information on the level of associations within groups can be accessed by using the association indices such as the Newman weighted association index (Newman 2001). In our analysis we explored the extent to which we can predict fine-scale association patterns from group-based data of small, replicated social networks in laboratory and semi-natural conditions. Our results show that correcting for group size when using a Group Association approach can give greater insight, into certain aspects of the social fine structure within groups, similar to that using the nearest neighbour approach. We found that despite a low mean group size (which would bring the GA results more in line with NN) the GA continued to produce disparate results in certain measures, which were mediated by both GA-SRI and GAc. Whilst we have focused our attention on the utility of this approach for studying small social networks under semi natural conditions there is no reason why such an approach could not be applied to social networks from wild populations to control for group size effects on standard social network measures.

Further work looking at various types of data sets and or social formations might be beneficial in terms of how this sampling method can be put to best use. Clearly, there is no gain to be made in using the GAc approach in samples which show lack of group size variation but this is not common in natural populations (Krause & Ruxton 2002). Similarly, an increase in sampling time is likely to dilute the differences between GA and NN in some network measures (e.g. increased sampling will increase the likelihood that all animals will be

seen at least once with all others thus producing identical measures of non-weighted degree, for example). However, time is likely to be a limiting factor for most researchers. This limitation on time, as well as resources and accessibility with regard to certain species/populations (Franks *et al.* 2009) provides a further advantage to using this technique.

Increasingly proximity loggers are becoming available for different species which register the identity of all conspecifics within a certain metric distance (Krause *et al.* 2011). This technique is likely to become popular because it provides automatic and continuous data on interactions (inferred from proximity) even for species where direct observations are normally difficult because they are hard to follow around (e.g. birds, marine mammals). Proximity loggers are likely to provide data that are more similar to the GA than the NN approach because the distance over which they detect conspecifics is usually larger than the minimum distance at which individuals approach each other (often resulting in the detection of multiple individuals at the same time or single individuals in quick succession). Therefore much of the assessment of the strengths and weaknesses of the GA approach in this paper should be informative to current or future users of proximity loggers.

3 Chapter 3

Association patterns in social networks: the effect of behavioural phenotype and predation risk

Abstract

Most animal social networks show non-random interaction patterns that can be driven by individual attributes, such as sex, size, age, but also on individual behavioural phenotypes and wider environmental factors. In this study I investigated the effect of an individual's boldness on its position in replicated social networks of guppies (*Poecilia reticulata*) and how this structure was influenced by predation risk. 240 guppies were tested for their boldness and subsequently their social network positions when housed in groups of 15 in semi-natural environments for 12 days. Each group was exposed to either a high simulated risk of predation (n=8) or a low risk of predation (n=8) and measured for the affect of the environmental treatment on network structure. The social network measures were quantified on day 2 and 12 prior to and after treatment exposure respectively. Network degree assortment differed significantly overall between days 2 and 12 with the predator group showing stronger and more positive correlations on day 12. A negative assortment according to type was seen throughout the testing periods in both treatment groups. Six standard network measures were calculated for both days (path length, clustering coefficient, unweighted and weighted degree, association strength and centrality flow measuring betweenness). The fish in the high predation risk groups showed an increase in the number of times they were seen with particular individuals, but a reduction in the number of individuals with which they were linked directly, together with a decrease in mean shoal size, longer path lengths between pairs and an increase in clustering coefficient, this suggests the formation of smaller, but highly connected clusters with a looser structure connecting them. Association strength in this predation exposed group was the only measure that could be predicted by the behavioural type measure and only on the final testing day. Bold females were less strongly associated than shy. These results demonstrate that both behavioural phenotype and level of predation risk have a significant effect on social network structure.

3.1 Introduction

The structure of associations within animal populations can have considerable importance for many fundamental behaviours such as foraging (Lusseau 2007), cooperation (Ohtsuki *et al.* 2006) and mating (Filatova *et al.* 2009). This structure is reliant on the interplay between individuals of varying phenotypic characteristics within a particular set of environmental contexts. In turn, the social structure of a population will exert its affects on the individuals within. Despite the multitude of possible interactions that can take place within fission-fusion societies, many animal groups commonly exhibit non-random assortment according to various individual attributes such as size, age, sex, colour (reviewed in Krause and Ruxton 2002). Studying the nature and stability of interactions within animal populations is vital in understanding the dynamics of important processes within animal societies, such as the spread of disease (Cross *et al.* 2004; Watts and Strogatz 1998) and information (Voelkl and Noë 2008; Latora and Marchiori 2001), the evolution and maintenance of co-operation (Liu *et al.* 2009; Santos *et al.* 2006a) and the ability for populations to utilise resources within their environment (Baird and Dill 1996; Hoelzel 1993).

Within the network certain individual characteristics, in combination with a particular network position, can provide a vital role. For example, particular individuals within a macaque (*Macaca nemestrina*) population have been shown to have a policing role on group conflict which has come to light after the individual has been removed (Flack *et al.* 2006). McComb *et al.* (2001) found that particular females within an African Elephant group (*Loxodonta africana*) were able to direct appropriate fright reactions which was apparent in periods of heightened risk. Understanding the behavioural make-up of those individuals which provide these pivotal roles, as well as how behavioural types interact within a network, is of great importance, therefore.

Individuals within populations of many different taxa have been shown to exhibit consistent behavioural repertoires which differ from others within the population along a continuum. The behavioural expression might be stable across time and/or contexts or correlated with other behaviours and is of ecological and evolutionary importance. The reaction to risk taking (bold-shy continuum) is of particular importance as it has been shown to be linked with shoaling behaviour (Ward *et al.* 2004a), habitat segregation (Wilson *et al.* 1993) and fitness in the wild (Réale and Festa-Bianchet 2003). Individual scores along the bold-shy continuum (measured according to the correlation between predator inspection and shoaling tendency) can explain certain structural patterns within wild guppy (*Poecilia reticulata*) social networks (Croft *et al.* 2009). The authors found that strong ties were positively assorted and weak ties were negatively assorted by individual boldness scores. A lab-based study involving a novel foraging task showed there may be adaptive benefits to behavioural type mixes within animal networks (Dyer *et al.* 2009). Using small, bold, shy and mixed groups of guppy females (measured using a simulated aerial attack test) the study showed that mixed groups were most successful at acquiring food and this is likely to be due to shy females following the bold, which were the quickest to finding the novel food.

Predation, a major selective force on the majority of wild animal populations, has not been similarly investigated with regard to the social structure of prey social networks. We may expect to see strong differences in social network structure between populations that experience differences in predation risk. Those individuals, co-occurring with predators, may form networks which enhance the development of co-operative interactions and differ from populations which experience low predation risk. For example, Trinidadian guppies from areas sympatric with the major guppy predator *Crenicichla alta*, have been found to form stable pairs via active partner choice (a pre-requisite to reciprocal altruism) (Croft *et al.* 2004b), and positively assort according to predator inspection

response (Croft *et al.* 2009). In birds, a heightened level of predation risk increased the likelihood of cooperation between neighbours, which suggests that predation may influence the evolution of cooperation in populations (Krams *et al.* 2010). However, no previous work has examined how ecological factors such as predation risk can influence the social structure of a network.

As several studies have reported significant differences in behavioural phenotype in individuals from populations which differ in predation risk (Bell 2005, Dingemanse *et al.* 2007) we would expect predation risk to have a significant impact on the social ties within populations. Furthermore, due to a plethora of behaviours shown to be linked to the bold/shy continuum (aggression – Huntingford 1976; habitat use, parasite load, habituation and foraging - Wilson 1998; dispersal - Fraser *et al.* 2001; foraging under risk – Johnson and Sih 2007) we expect that behavioural phenotype should correlate with particular network measures and following on from Dyer *et al.* (2009) and Croft *et al.* (2009), type should predict assortativeness.

The aim of this study is to investigate how the behavioural type of an individual corresponds with several standard measures of network positioning and whether and how the network structure alters in the presence of a consistent predation threat. I quantified the structure of 16 separate Trinidadian guppy (networks using social network analysis. Social Network Analysis (SNA) has the ability to provide a quantification of the associations occurring at varying levels of organisation within a population and over various timescales and/or contexts, allowing for a fuller understanding of the consequences of population structure and individual position within. SNA has already uncovered particular non-random patterns within various animal networks which have altered according to differing conditions both external (Cross *et al.* 2004) and internal (Darden *et al.* 2009) to the social group.

I quantified patterns of social association on day 2 and then on day 12 after exposing half of the networks to a predation experience, leaving 8 as a control. Female guppies were used in the experiment as

they've been shown to form strong links (Croft *et al.* 2004b), and a preference for familiar females (Griffiths and Magurran, 1997a and b) and site (Croft *et al.* 2003c). Due to differing life history priorities from the males, they are perhaps more likely to form the most stable part of the population social network.

Guppies are particularly well studied and have been shown to respond markedly to variation in predation levels (see Magurran 2005). As well as differences in colour and life history strategies (Endler 1980; Reznick and Endler 1982), guppies from populations which contrast in predation risk show clear behavioural differences (mating displays, Godin 1995; intraspecific aggression, Magurran and Seghers 1991; predator inspection, Dugatkin and Alfieri 1992) including variation in shoal size and tendency to shoal (Magurran and Seghers 1994a). The experience of a simulated predatory event is expected to affect the patterning of the social network, despite the common previous history of high predation for all the fish.

3.2 Methods

The study was carried out using 240 wild-caught adult female guppies (body length - mean±s.d.: 29.24±2.8mm) caught in April and May 2008 from the lower reaches (high predation area) of the Aripo River in the Northern Mountain Range, Trinidad (N10°40 W61°14′). At this location the guppies co-occur with the major guppy predators *Crenicichla frenata*, and *Hoplias* spp (Magurran 2005). Guppies were caught in two-metre seine nets from pools in the river, spaced over a distance of 400m, brought into the laboratory and subdivided between 4 large aquaria (l×h×w=76×46×46 cm, water depth=35 cm) for a settling period of 48hours. During this time the aquaria were illuminated overhead with fluorescent lights on a 12 L: 12 D cycle, and water temperature was maintained at 24°C.

Each individual's behavioural phenotype was quantified by recording its response to a simulated aerial predation strike (Dyer *et al.*

2009). Previous work in guppies has shown high levels of inter-individual variability in the response to this test which are stable over time (Dyer *et al.* 2009). Fish were tested in a test tank 30x30x30cm (water depth=15cm) shielded on three sides with opaque material. To minimise stress in the focal individual and to ensure behaviour shown was similar to that likely to be shown in nature (ie within the social context, Malloy 2005), a small stimulus shoal, which had been previously acclimatised to the test conditions was placed in a 10cm transparent, perforated cylinder, located at one side of the tank area. All fish were fed at least one hour prior to testing to avoid state dependence effects. After a 5 minute settling period, a weight, (11mm diameter metal nut) attached to a length monofilament line, was dropped using a remote pulley mechanism from a height (33cm) directly above the tank centre. On hitting the water all test fish froze and I recorded the time taken for the test fish to resume movement.

The fish were tested in four batches of 60 fish. Each batch was used to populate 4 social networks with the assignment of fish (N=15) to each network being dependent on their behavioural score (female mean body length per network ± s.d. = 29.23±0.736mm). Following testing (e.g. in batch 1), all fish were ranked and given individual identity marks (see below) according to their behavioural score (the fastest four fish to move were assigned id 1 and placed randomly in networks 1-4; the second four id 2 and so on until all fish had an id from 1 to 15). Each of the 16 networks was housed in an outdoor pool (180 cm diameter, 15 cm water depth), which had natural substrate (small, algae covered stones) collected from the river of origin. Each fish within a network was given an individual identity mark using visual implant elastomer (see Croft *et al.* 2003c for details) which has been shown to have no significant affect on shoal choice behaviour (Croft *et al.* 2004b). The fish were left to acclimatize for 28 hours in their pools.

Association patterns were recorded on day 2 and day 12 by an observer, sitting quietly at the pool side, taking still photographs using a handheld Nikon D40x digital camera. For the purpose of sampling,

the pool was subdivided into quadrants and observations were made for 15 minutes in each quarter with interactions being quantified once per minute. Individuals were recorded only once per minute and the recording was taken from the largest group, if the individual was seen in more than one group during this time, thus ensuring the majority of observed individuals were scored. The researcher sat still for 10 minutes prior to sampling to allow the fish to become acclimatised to him/her in a different quadrant. For each quadrant of the pool the observer was no more than 90cm away from any individual. Most observations occurred within the widest area of each quarter but adjustment were made by eye, to account for the distorted angle of observation of those associating closest to the furthest point within the quarter.

Between days 2 and 12 half of the networks (8 networks chosen randomly) were exposed to simulated predation, leaving 8 networks as the control group. In the predator treatment group the fish were exposed to both visual (a model predator, which roughly resembled a pike cichlid in size (length=13cm), shape and colour, including the characteristic red iris of *C. frenata*) and chemosensory cues (conspecific chemical alarm cues of an attack). This occurred from days 3 to 11, inclusive by suspending the model (using monofilament line attached to a 2m pole) in the pool for a 10 minute period once daily. On introduction to the pool, the model was accompanied by conspecific chemical alarm cues sprayed onto the water surface. Previous work has shown that guppies use these chemical cues, which are released following mechanical damage of the epidermis, to assess local predation risk (Brown *et al.* 2009). Alarm cues were collected from non-gravid females (assessed visually) from the same study population (the Aripo River see above) following the method described by Brown *et al.* (2009). Cue donors were sacrificed by cervical dislocation and the tail (at the caudal peduncle) and all internal visceral tissue was removed. All remaining tissue was homogenized and placed in 500ml of aged tap water which was filtered through polyester filter floss. Approximately 10ml of

alarm cue was added to the pool on each occasion via a hand held sprayer. In the control group the pools were exposed to the same disturbance and the pole was moved over the pool but no predator was introduced and 10ml of aged tap water was sprayed instead of the alarm cue. Once experiments were concluded, the fish were released into a semi-natural pond on UWI St Augustine campus. Losses due to illness or potential predation by birds occurred, amounting to 13 individuals in the groups undergoing the predation treatment and 6 individuals in the control groups.

Social interactions were identified from the photographs and fish were defined as interacting socially if they were observed within four body lengths (similar to Pitcher *et al.* 1983). This is within the defined distance whereby shoaling fish are known to be interacting (Pitcher *et al.* 1983), which is commonly used and has been previously successful in describing shoaling behaviour in guppies (Croft *et al.* 2004b). Individual distances could be indentified with ease as individuals at the surface and the bottom were still within the inter-individual interaction distances mentioned above.

No individual was recorded more than once within the same minute. From the photographs we were able to build association matrices and network diagrams (figure 3.1) depicting all associations seen within the network between all individuals. From this were calculated standard network measures using the Newman weighted association index (Newman 2001). Chapter 2 shows how this method can give fine-scale information about associations using group-type data. I measured a fish's social position by using five commonly used network measures, namely weighted path length (PL); weighted clustering coefficient (CC); weighted degree (WD); association strength (AS); unweighted degree (UWD) and betweenness (centrality flow). The unweighted degree score used here was binary, providing a score of 0 for any pair of individuals which were never seen together and 1 for those seen in the same group one or more times. The betweenness measure chosen was that of normalised centrality flow (Freeman *et al.* 1991). By using the full weight of associations,

undirected data and avoiding the reliance on only the shortest path between pairs, this measure is able to provide a quantification of the level of influence each individual might have within the network.

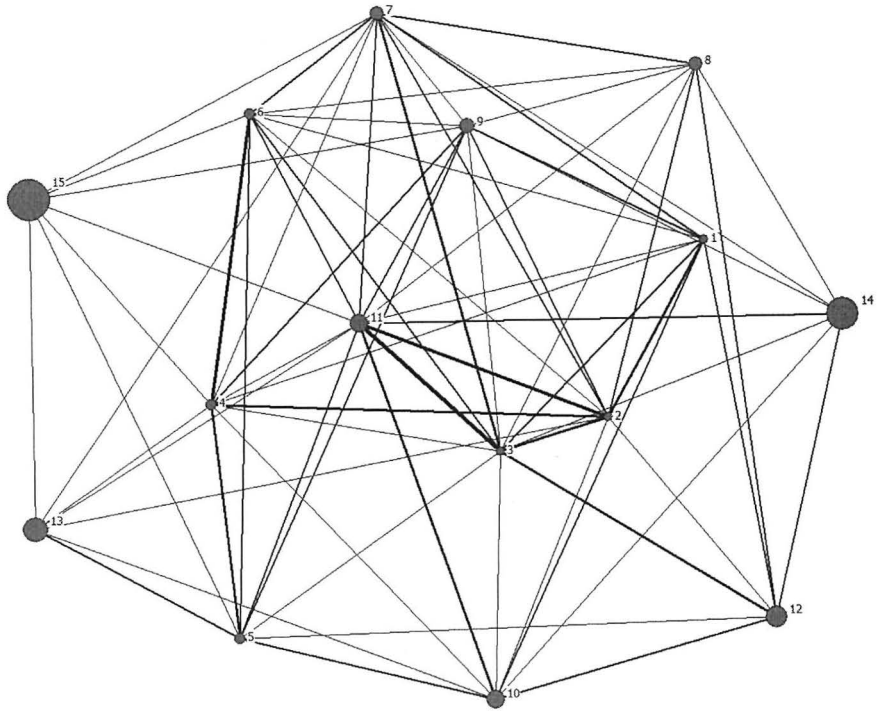

Figure 3.1: diagram (sociogram) of a single network on day 2 with spring embedding. The circles (nodes) are individual females whose increased latency to move in the drop test (behavioural phenotype) is portrayed here by an increase in node size. The lines between nodes (edges) indicate the number of associations between pairs of individuals, with increased strength of associations (tie strength) being highlighted by thicker lines.

Statistical analysis

Spearman's correlations on the simulated aerial attack test on day 1 and day 13 were used to test for repeatability within behavioural type over the testing period. Any differences between treatment groups in

the test, which occurred after predator treatment had taken place, were ascertained by use of a Mann-Whitney U test.

The size of the shoals in which individuals were observed was averaged for each fish across the sampling period. I used a mixed between-within subjects ANOVA to find differences between sampling days, treatments and their interaction. Due to non-normal data, a Generalised Estimating Equation (GEE) was used to analyse differences between treatments groups and over the sampling period in the proportion of shoals to single fish in each network.

To determine the relationship between an individual's boldness score and standard network measures I used the regression analysis within UCINET (Borgatti *et al.* 2002). The various network positions for individuals within each network were regressed with their individual drop test scores on day 2 and day 12. The regression analysis in UCINET is able to account for non-independence by shuffling the node labels creating a random sorting with which the original data could be compared. Although there is no facility as yet to account for group size distribution, the small networks used in this study were unlikely to have produced wide ranging difference in group size. A Fisher's combined test (Sokal and Rohlf 1995) was then used to assess the significance within each treatment group. To test to see whether individuals associate most with others with similar attributes I carried out a Moran test within UCINET. This gives a measure for the social proximity of individuals in terms of their similarity (or dissimilarity) in behavioural scores and is compared to randomly assorted networks (Hanneman and Riddle, 2005). A Fisher's combined test was, again, used to obtain the significance overall. This analysis was used to measure assortment on both sampling days and for unweighted degree. Univariate and repeated measures ANOVAs were used to assess the differences between treatment groups in the correlation coefficients on each sampling day and the change over the two sampling days respectively.

To test for significance in the correlations between association matrices on day 2 and 12 in each treatment group we used the mantel

test using the poptools application (Hood 2009), and within treatment group p-values were combined using Fisher's combined test (Sokal and Rohlf 1995). The differences between days and groups in network measures were obtained using a Generalised Estimating Equation (GEE) with day as the repeated measure and networks nested within treatment. To test for significant differences between the groups in network measures on day 12 we used a Generalised Linear Model (GLIM), again with network nested within treatment group. Significant and marginal values are discussed together with effect sizes (E.S.) and confidence intervals (CIs), in line with the argument discussed in Stoehr (1999). Stoehr (1999) argues that testing according to preset limits stems from research which traditionally requires binary decisions, once completed, which are made against a null hypothesis which is (arguably, unrealistically) most often set to zero. Presenting the results according to preset significance testing loses much of the biologically meaningful inferences (Stoehr 1999). Effect size and confidence intervals are presented (Nakagawa and Cuthill 2007). For independent groups they are calculated according to Cohen's *d* test; for single and repeated measures ANOVA designs, adaptations of the *d*-statistic from Cortina and Nouri (2000) and Morris and Deshon (2002) are used. Confidence intervals for Spearman's correlations were calculated using the formula in Altman and Gardner (1988). All analyses were carried out using SPSS (version 14 2005). Tests were corrected when appropriate for multiple testing using Benjamini and Hochberg's (1995) corrections.

3.3 Results

Repeatability of behavioural type

There was a significant positive correlation between the reaction to a simulated aerial attack on the first and second test when measured across all individuals (Spearman correlation: r=0.239,

N=224, p<0.001). When this analysis was split by treatment only the control group showed significant repeatability between tests (r=0.291, N=115, p<0.008) after Benjamini and Hochberg (1995) corrections, whereas the predator exposed showed a non-significant positive relationship (r=0.183, N=109, p=0.057). These results can be understood further by exploring the confidence intervals which accompany the effect sizes provided by the correlation coefficient, thus providing a greater understanding of the biological significance. Across all females (Spearman's correlation, 95 CI: r=0.239, 0.111 to 0.358, S.E.r=0.067) the effect is small but the CIs, although wide, do not include zero. It can be assumed, therefore, that these females have come from a population of individuals with repeatable phenotypes along the bold-shy continuum. Within groups (Control: r=0.291, CI: 0.114 to 0.450, S.E.r=0.095; predator: r=0.183; CI: -0.005 to 0.359, S.E.r=0.097) only the control group showed a notable effects size and CIs which did not include zero. The treatment groups did not differ significantly (Mann-Whitney U – Z= -0.940, p=0.347) in the second behavioural screening after they had been exposed to the predation or control treatments. Exploration of the repeatability of the extreme phenotypes without the potentially diluting effects of the intermediate fish results produces slightly stronger effects but, again, accompanied by wide CIs. The correlation between tests was stronger when only the bold and shy females were analysed (all individuals r=0.271, N=149, p=0.001, CI=0.115 to 0.414, S.E.r=0.083; control group r=0.355, N=76; p=0.002, CI= 0.141 to 0.537, S.Er=0.117, predator exposed r=0.182, N=73, p=0.124, CI= -0.049 to 0.396, S.Er= 0.120).

Shoaling characteristics

There was a close to significant difference in the interaction between treatments and day in the size of shoal in which individuals were observed (mixed between-within subjects ANOVA: $F_{1,14}$= 4.434, p=0.054). The effect size is strong with CIs which did not cross zero (E.S., CIs: 2.31, 0.941 to 3.684) but which are widely distributed. The average shoal size increased from day 2 to day 12 for the control

group (mean±s.d.: day 2 = 3.79±0.62 day 12 = 4.07±0.83), but decreased in the predator group (mean±s.d.: day 2 = 4.05±0.49 day 12 = 3.13±0.88).

The statistically significant change from day 2 to day 12 (GEE with backwards elimination of day*treatment and treatment: χ^2 = 24.971, df=1, p<0.001) in the proportion of shoals observed (from the overall total number of shoals and single fish) did not result in any difference between the treatment groups (after backwards elimination of day*treatment: χ^2 = 0.135, df=1, p=0.714) or in the interaction between sampling day and treatment group (χ^2 = 0.510, df=1, p=0.475). Across both treatments, individuals were seen more often in groups than as singletons on day 12 in comparison to day 2 (median + interquartiles: day 12= 0.64 + 0.53-0.72; day 2= 0.46 + 0.40-0.56).

Behavioural phenotype and social network position.

An individual's behavioural type was not able to predict network positioning on day 2 (table 3.1). The significant Fisher's combined test result seen in both the weighted and unweighted degree is likely to be driven by a single network which reduces its biological relevance. On day 12, in the predator treatment, an individual's behavioural phenotype was a marginally non-significant predictor of their strength of social associations (table 3.1), with shyer females forming stronger associations. No such pattern was observed in the control group.

Assortative interactions in social networks

The assortment between behavioural types within each network differed significantly from random when grouped according to treatment (table 3.2). The strongest correlations were negative, indicating dissassortative network interactions. The treatment groups did not differ in mean behavioural type correlation coefficients on day 2 (univariate ANOVA: $F_{1,14}$ = 0.144, p=0.710), day 12 ($F_{1,14}$ = 1.473, p=0.245) or in the change in correlation coefficients over the sampling days (repeated measures ANOVA: $F_{1,14}$ = 0.526, p=0.480).

Table 3.1: regressions of network position on individual attribute (behavioural type score) on both days for all networks with significance taken from comparisons with 1,000 random permutations. Testing for overall significance using Fisher's combined.

Day 2		WPL	WCC	UWD	WD	AS	nCF
P	1	R^2<0.001, p=0.968	R^2=0.069, p=0.281	R^2<0.001, p=0.939	R^2=0.008, p=0.761	R^2=0.001, p=0.934	R^2=0.027, p=0.551
	2	R^2=0.169, p=0.133	R^2=0.088, p=0.273	R^2=0.025, p=0.575	R^2=0.123, p=0.186	R^2=0.034, p=0.533	R^2=0.108, p=0.241
	6	R^2=0.010, p=0.694	R^2=0.013, p=0.677	R^2=0.085, p=0.305	R^2<0.001, p=0.958	R^2=0.006, p=0.790	R^2=0.098, p=0.236
	7	R^2=0.002, p=0.872	R^2=0.001, p=0.941	R^2=0.003, p=0.951	R^2=0.053, p=0.453	R^2=0.086, p=0.288	R^2=0.040, p=0.476
	10	R^2=0.440, p=0.024	R^2=0.877, p<0.001	R^2=1.000, p<0.001	R^2=0.631, p=0.001	R^2=0.328, p=0.028	R^2=0.266, p=0.052
	12	R^2=0.061, p=0.369	R^2=0.014, p=0.687	R^2=0.061, p=0.395	R^2=0.005, p=0.821	R^2=0.028, p=0.556	R^2=0.094, p=0.278
	14	R^2=0.075, p=0.319	R^2=0.002, p=0.893	R^2=0.073, p=0.319	R^2=0.048, p=0.411	R^2=0.016, p=0.630	R^2=0.005, p=0.817
	16	R^2=0.291, p=0.035	R^2=0.269, p=0.043	R^2=0.293, p=0.036	R^2=0.122, p=0.215	R^2=0.057 p=0.352	R^2=0.209 p=0.104
C	3	R^2=0.326, p=0.209	R^2=0.077, p=0.283	R^2=0.077, p=0.302	R^2=0.010, p=0.707	R^2=0.002, p=0.883	R^2=0.001, p=0.940
	4	R^2=0.001, p=0.912	R^2=0.007, p=0.753	R^2=0.002, p=0.883	R^2=0.016, p=0.673	R^2=0.017, p=0.647	R^2=0.000, p=0.980
	5	R^2=0.384, p=0.012	R^2=0.036, p=0.518	R^2=0.390, p=0.015	R^2=0.467, p=0.006	R^2=0.489, p=0.001	R^2=0.221, p=0.088
	8	R^2=0.003, p=0.847	R^2=0.058, p=0.389	R^2=0.003, p=0.876	R^2=0.352, p=0.012	R^2=0.422, p=0.005	R^2=0.020, p=0.618
	9	R^2=0.033, p=0.535	R^2=0.006, p=0.810	R^2=0.045, p=0.451	R^2=0.045, p=0.451	R^2=0.008, p=0.751	R^2=0.088, p=0.278
	11	R^2=0.009, p=0.742	R^2<0.001, p=0.977	R^2=0.009, p=0.764	R^2=0.013, p=0.684	R^2<0.001, p=0.954	R^2=0.006 p=0.779
	13	R^2=0.114, p=0.226	R^2=0.092, p=0.290	R^2=0.110, p=0.220	R^2=0.005, p=0.784	R^2=0.016, p=0.639	R^2=0.058, p=0.391
	15	R^2=0.007, p=0.774	R^2=0.033, p=0.493	R^2=0.007, p=0.793	R^2=0.018, p=0.632	R^2=0.010, p=0.713	R^2=0.057, p=0.382
Fisher's combined		Z= 41.34 ($\chi^2_{0.05\{32\}}$=46.19) >0.05	Z= 42.38 ($\chi^2_{0.05\{32\}}$=46.19) >0.05	**Z= 49.85 ($\chi^2_{0.05\{32\}}$=46.19) <0.05**	**Z= 48.96 ($\chi^2_{0.05\{32\}}$=46.19) <0.05**	Z= 43.46 ($\chi^2_{0.05\{32\}}$=46.19) >0.05	Z= 34.66 ($\chi^2_{0.05\{32\}}$=46.19) >0.05
Day 12		**WPL**	**WCC**	**UWD**	**WD**	**AS**	**nCF**
P	1	R^2=0.093, p=0.248	R^2=0.088, p=0.231	R^2=0.014, p=0.654	R^2=0.032, p=0.507	R^2=0.021, p=0.612	R^2=0.006, p=0.813
	2	R^2=0.013, p=0.699	R^2=0.131, p=0.195	R^2=0.007, p=0.780	R^2=0.006, p=0.786	R^2=0.087, p=0.286	R^2=0.056, p=0.390
	6	R^2=0.017, p=0.663	R^2=0.002, p=0.889	R^2<0.001, p=0.955	R^2=0.034, p=0.555	R^2=0.110, p=0.255	R^2=0.057, p=0.400
	7	R^2=0.092, p=0.226	R^2=0.113, p=0.224	R^2=0.097, p=0.244	R^2=0.124, p=0.208	R^2=0.094, p=0.268	R^2=0.252, p=0.054
	10	R^2=0.177, p=0.145	R^2=0.138, p=0.159	R^2=0.163, p=0.147	R^2=0.160, p=0.123	R^2=0.224, p=0.048	R^2=0.065, p=0.376
	12	R^2=0.351, p=0.037	R^2=0.368, p=0.037	R^2=0.379, p=0.035	R^2=0.237, p=0.070	R^2=0.324, p=0.025	R^2=0.236, p=0.067
	14	R^2=0.225, p=0.077	R^2=0.73, p=0.339	R^2=0.133, p=0.172	R^2=0.170, p=0.133	R^2=0.277, p=0.045	R^2=0.145, p=0.165
	16	R^2=0.013, p=0.724	R^2=0.025, p=0.547	R^2<0.001, p=0.964	R^2=0.019, p=0.620	R^2=0.041 p=0.510	R^2=0.003, p=0.852
Fisher's combined		Z= 23.53 ($\chi^2_{0.05\{16\}}$=26.30) >0.05	Z= 23.07 ($\chi^2_{0.05\{16\}}$=26.30) >0.05	Z= 18.39 ($\chi^2_{0.05\{16\}}$=26.30) >0.05	Z= 20.66 ($\chi^2_{0.05\{16\}}$=26.30) >0.05	**Z= 29.85 ($\chi^2_{0.02\{16\}}$=29.63) <0.02***	Z= 21.25 ($\chi^2_{0.05\{16\}}$=26.30) >0.05
C	3	R^2=0.073, p=0.287	R^2=0.074, p=0.314	R^2=0.146, p=0.123	R^2=0.237, p=0.060	R^2=0.252, p=0.050	R^2=0.205, p=0.093
	4	R^2=0.008, p=0.752	R^2=0.014, p=0.673	R^2=0.007, p=0.770	R^2=0.131, p=0.183	R^2=0.308, p=0.039	R^2=0.001, p=0.916
	5	R^2<0.001, p=0.948	R^2<0.001, p=0.958	R^2<0.001, p=0.967	R^2=0.005, p=0.772	R^2=0.011, p=0.712	R^2=0.019, p=0.617
	8	R^2<0.001, p=0.974	R^2=0.031, p=0.448	R^2=0.057, p=0.421	R^2=0.023, p=0.586	R^2=0.004, p=0.806	R^2=0.058, p=0.376
	9	R^2<0.001, p=0.976	R^2=0.002, p=0.887	R^2=0.007, p=0.757	R^2=0.003, p=0.869	R^2=0.002, p=0.859	R^2=0.001, p=0.932
	11	R^2=0.027, p=0.559	R^2=0.017, p=0.626	R^2=0.010, p=0.732	R^2=0.017, p=0.663	R^2=0.001, p=0.938	R^2=0.000, p=0.945
	13	R^2=0.289, p=0.066	R^2=0.316, p=0.044	R^2=0.127, p=0.140	R^2=0.014, p=0.698	R^2=0.029, p=0.570	R^2=0.056, p=0.409
	15	R^2=0.002, p=0.872	R^2=0.002, p=0.882	R^2=0.008, p=0.751	R^2=0.136, p=0.177	R^2=0.218, p=0.081	R^2=0.153, p=0.146
Fisher's combined		Z= 10.15 ($\chi^2_{0.05\{16\}}$=26.30) >0.05	Z= 12.48 ($\chi^2_{0.05\{16\}}$=26.30) >0.05	Z= 12.20 ($\chi^2_{0.05\{16\}}$=26.30) >0.05	Z= 15.89 ($\chi^2_{0.05\{16\}}$=26.30) >0.05	Z= 20.17 ($\chi^2_{0.05\{16\}}$=26.30) >0.05	Z= 13.74 ($\chi^2_{0.05\{16\}}$=26.30) >0.05

P = simulated predator treatment; c = control treatment;

*** - marginally non-significant after Benjamini and Hochberg (1995); [p=0.01]**

Table 3.2: the Moran test (UCINET) for each network for the behavioural type assortment and unweighted degree assortment with overall significance measured using the Fisher's combined test.

Predator treatment group					Control group				
	Behavioural type associations		**Unweighted degree associations**			**Behavioural type associations**		**Unweighted degree associations**	
Networks	***day 2***	**day 12**	***day 2***	***day 12***	Networks	***day 2***	***day 12***	***day 2***	***day 12***
1	r= 0.143 p=0.021	r= -0.222, p=0.014	r= 0.057, p=0.012	r= 0.045, p=0.015	3	r= -0.170, p=0.178	r= 0.048, p=0.013	r= 0.046, p=0.017	r= 0.064, p=0.022
2	r= -0.218, p=0.074	r= -0.306, p=0.070	r= 0.065, p=0.004	r= 0.218, p=0.001	4	r= -0.120, p=0.272	r= 0.074, p=0.054	r= -0.182, p<0.001	r= -0.021, p=0.154
6	r= -0.077, p=0.474	r= -0.110, p=0.388	r= 0.062, p=0.005	r= 0.387, p=0.003	5	r= 0.124, p=0.009	r= -0.191 p=0.105	r= -0.040, p=0.285	r= -0.145, p=0.077
7	r= 0.055, p=0.037	r= -0.153, p=0.078	r= -0.091, p=0.269	r= -0.146, p<0.001	8	r= 0.070, p=0.017	r= -0.021, p=0.303	r= -0.116, p=0.031	r= 0.074, p=0.020
10	r= 0.054, p=0.042	r= -0.056, p=0.481	r= -0.095, p=0.336	r= 0.111, p=0.002	9	r= -0.066 p=0.499	r= -0.173, p=0.035	r= 0.050, p=0.026	r= 0.014 p=0.050
12	r= -0.093, p=0.445	r= 0.010, p=0.198	r= -0.172, p<0.001	r= 0.030, p=0.029	11	r= -0.066, p=0.456	r= 0.119, p=0.062	r= -0.068, p=0.426	r= 0.187, p<0.001
14	r= -0.062, p=0.462	r= 0.038, p=0.251	r= -0.099, p=0.232	r= 0.494, p<0.001	13	r= -0.046, p=0.415	r= -0.098, p=0.404	r= -0.051, p=0.423	r= 0.055, p=0.010
16	r= -0.008, p=0.211	r= -0.044 p=0.405	r= -0.043, p=0.196	r= 0.286, p<0.001	15	r= -0.091, p=0.457	r= -0.041, p=0.376	r= -0.077, p=0.478	r= -0.003, p=0.142
Fisher's combined test	**Z= 33.64 ($>\chi^2_{0.01\{16\}}$ = 32.00)**	**Z= 30.13 ($>\chi^2_{0.02\{16\}}$ = 29.63)**	**Z=59.89 ($>\chi^2_{0.001\{16\}}$ = 39.25)**	**Z=108.61 ($>\chi^2_{0.001\{16\}}$ = 39.25)**	**Fisher's combined test**	**Z= 29.91 ($>\chi^2_{0.02\{16\}}$ = 29.63)**	**Z= 37.45 ($>\chi^2_{0.002\{16\}}$ = 37.15)**	**Z=48.23 ($>\chi^2_{0.001\{16\}}$ = 39.25)**	**Z= 61.85 ($>\chi^2_{0.001\{16\}}$ = 39.25)**
p	<0.01*	<0.02§	<0.001*	<0.001*	**p**	<0.02§	<0.002*	<0.001*	<0.001*

* - significant after Benjamini and Hochberg (1995) corrections [p=0.01]; § - marginally non-significant

Similarly, significant differences from random were seen in the assortment according to unweighted degree (table 3.2). Overall the networks, the degree assortment differed significantly between days 2 and 12 (within-between subjects ANOVA: $F_{1,14}$ = 12.709, p=0.003, E.S.= -1.169; CI: -0.429 to -1.910). The effect size is strong and the CIs, although widely distributed, do not include zero, adding biological significance to the result. There was no apparent difference between treatment groups in the change between days 2 and 12 ($F_{1,14}$ = 2.841, p=0.114; E.S.= -0.334, CI: -0.908 to 0.240, s.e.= 0.293). Only 5 of the 16 networks exhibited positive correlations on day 2, but this rose to 12 networks of 16 on day 12. Between treatments there was no significant difference in degree correlation on day 2 (univariate ANOVA: $F_{1,14}$ = 0.131, p=0.723). However, on day 12, although the NHST indicates no significance ($F_{1,14}$ = 3.417, p=0.086), the effect size is relatively large and its CIs do not cross zero (Hedge's d, CI: 5.381, 2.701 to 8.062). The large distribution of the CI could be due to the small sample sizes, but does not detract from the biological significance of the result that on day 12 the predator group exhibited stronger degree correlations in its networks than did the control group.

Social Network structural changes over time and between treatments

The social network on day 2 was a significant predictor to that of day 12 for the predator treatment group (table 3.3), although the strengths of the correlations between days were weak and only significant for two out of the eight networks. In contrast, after multiple test correction, the control group showed no such significance in correlations between days indicating that individuals did not maintain the same social patterns over the duration of the study in the control group (table 3.3).

Table 3.3: mantel tests of the correlations between association matrices from both sampling days for individual networks; with a Fisher's combined test to assess significance within treatment groups.

	Sum of products, original matrices	**Correlation between days 2 & 12, original matrices**	**Significance compared to randomised test frequency distribution**	**Mean correlation±s.d. (999 iterations)**
Predator treatment				
Net 1	Z = 76.927	0.223	p = 0.023	-0.003±0.115
Net 2	Z = 48.354	0.205	p = 0.047	0.006±0.112
Net 6	Z = 39.194	0.043	p = 0.315	0.045±0.122
Net 7	Z = 156.806	0.017	p = 0.411	-0.004±0.100
Net 10	Z = 63.419	0.170	p = 0.129	-0.000±0.140
Net 12	Z = 80.283	0.112	p = 0.134	-0.000±0.102
Net 14	Z = 24.336	0.034	p = 0.352	-0.005±0.117
Net 16	Z = 53.435	0.124	p = 0.148	0.001±0.114
Fishers test – $2\sum \ln P = 32.74 > \chi^2_{0.010\{16\}} = 32.000$, so $p<0.010$*				
Control				
Net 3	Z = 26.712	-0.117	p = 0.197	-0.003±0.130
Net 4	Z = 70.687	-0.032	p = 0.446	-0.004±0.127
Net 5	Z = 34.157	-0.093	p = 0.217	0.001±0.113
Net 8	Z = 47.461	-0.052	p = 0.332	-0.004±0.103
Net 9	Z = 38.171	0.021	p = 0.395	-0.006±0.107
Net 11	Z = 36.502	0.057	p = 0.289	-0.007±0.119
Net 13	Z = 51.944	0.016	p = 0.396	0.003±0.103
Net 15	Z = 50.931	0.162	p = 0.086	0.006±0.109
Fishers test – $2\sum \ln P = 21.66 < \chi^2_{0.050\{16\}} = 26.300$, so $p>0.050$				

* - significant after Benjamini and Hochberg (1995) corrections [p=0.010]

The treatment groups (networks nested within treatments) differed significantly in the level of change in five of the six network measures across sampling days 2 and 12 (Generalised Estimating Equation: weighted path length - $\chi^2_{1,15} = 255.773$, $p<0.001$; weighted clustering coefficient - $\chi^2_{1,15} = 1586.617$, $p<0.001$; unweighted degree - $\chi^2_{1,15} = 364.538$, $p<0.001$; weighted degree - $\chi^2_{1,15} = 158.892$, $p<0.001$ and association strength - $\chi^2_{1,15} = 162.444$, $p<0.001$ but not in flow betweenness - $\chi^2_{1,15} = 7.502$, $p=0.942$). The networks in the

predation group showed greater changes; increasing in path length, clustering coefficient, weighted degree and association strength over the sampling days and decreasing in degree.

On day 12 the only difference between the treatment groups was in the measure of unweighted degree (Generalised Linear Model: $\chi^2_{1,15}$ = 25.901, p=0.039). After Benjamini and Hochberg (1995) corrections [p=0.01] this was shown to be only marginally non-significant. The predator group exhibited lower levels of individual connectedness than the control group on day 12 (median, interquartile range: predator group = 8, 6-12; control group = 11, 8-13).

3.4 Discussion

Over time alone, few significant changes took place in the social network structure or assortment patterns, but significant differences did occur when the treatment groups were compared. Contrary to the control group, the predator treatment group changed substantially in all network measures except centrality flow and showed a reduction in shoal size over sampling days. All networks exhibited a significant change to the degree assortment from day 2 to day 12 towards positive and stronger correlations. However, the treatment groups showed a biologically significant difference in degree assortment on day 12. Network association patterns changed substantially over time in the control group but not in the treatment group. Behavioural type was able to predict association strength on day 12 in the predation group. Individuals showed behavioural type assortment which was different from random and which was negative in the majority of networks. This did not differ over time or between treatments.

A common phenomenon of many diverse networks is the lack of randomness in their structure (Krause *et al.* 2007) - individuals tend to associate with certain members of the population but not others. Certain standard network measures, describing individual positioning or global structure, can be affected by influences, both exterior and

interior to the group, such as disease (Cross *et al.* 2004) or male harassment (Darden *et al.* 2009). The structure of social networks will provide a population with particular vulnerabilities and strengths, such as the commonly seen non-random assortment with high clustering and small path lengths termed "small world" networks (Watts and Strogatz 1998). These networks patterns exhibit common characteristics, such as vulnerability to the spread of infectious diseases and reduced likelihood of the emergence of "tit for tat" co-operation; the smaller the path lengths (Watts and Strogatz 1998).

The effect of predation on shoal size

The change in shoal size over the testing period is unexpected given the research into the effect of predation on shoaling in guppies. Inspection group sizes have been shown to be larger in areas where risk of predation is high (Magurran and Seghers 1994a). However, these groups were not distinguished on the basis of sex. The schools could have, therefore, consisted of a small number of females with males accompanying them in order to gain from sneaky matings, a common behaviour shown in males (Magurran and Nowak 1991). This behaviour has been shown to be more prevalent in areas under high risk of predation and may be due to males spending more time pursuing matings due to their smaller size (and therefore reduced energetic needs) and the relatively even sex ratio in comparison to low predation areas (Magurran and Seghers 1994b). The reduced shoal sizes in this study may, therefore, point to the move towards a more optimal size for cooperative predator inspection, a move which surprised Magurran and Seghers (1994a) when it was not discovered in their study.

Behavioural phenotype and network position

In this study only the networks in the group exposed to a simulated predation regime were found to have a marginally non-significant relationship between behavioural phenotype and network position. A female guppy's position along the bold-shy continuum could predict

how strongly she was connected to other females on average. Shy fish are known to have a higher shoaling tendency (Ward *et al.* 2004c), which goes some way to explaining this pattern. The relationship between association strength and the bold-shy continuum has also been seen in a wild population of Trinidadian guppies (Croft *et al.* 2009), who showed that bold guppies formed fewer and weaker ties than shy and also in stickleback where shy fish in mixed shoals had a higher association strength than bold (Pike *et al.* 2008). It is likely that this is a common pattern. The fact that it is only seen in the predation treatment, in this study, might point to the fact that these strong associations take time to develop, but develop quicker in certain selectively important circumstances (ie under increased predation threat).

Network assortment

Behavioural type associations differed from random but the correlations are weak. The strongest correlations in the predator treatment group on day 12 were negative, but many networks showed a lack of any correlation. Tentative suggestions that those experiencing simulated predation events may associate with others which are dissimilar in behavioural type in order to reduce competition aiding foraging success are supported by the work of Dyer *et al.* (2009). The authors found that adult female guppy associations, within tanks containing mixed behavioural types and given a novel foraging task, were dissassortative according to type, and this was based on the score for their reaction to a simulated aerial attack. They suggest that dissassortative type associations may be beneficial for both phenotypes. As boldness (risk-taking) has often been linked with increased levels of activity (Sih *et al.* 2003; Bell 2005; Pike *et al.* 2008) a positive assortment according to behavioural phenotype could occur due to passive associations between active individuals. Whereas the negative assortment in the predation group, although weak, is born out of active partner choice. This finding conflicts with the positive assortment seen between behavioural

phenotypes (based on their predator inspection and shoaling scores) in a single but ample and wild guppy network (Croft *et al.* 2009). However, Croft *et al.* (2009) also found negative assortment according to behavioural type in their wild guppy population, which were weak in terms of association frequency. The fact that the networks are relatively small might have allowed greater mixing between behavioural types than would be seen naturally. Wild female guppies are expected to associate with small numbers of close contacts (Griffiths and Magurran 1997b; Croft *et al.* 2004b). These associations are thought to enhance survival within particular environmental circumstances and this may induce them to make stronger associations with particular individuals. Within the small networks situated in semi-natural conditions in this study the circumstances which enhance assortment may not be as potent, encouraging greater mixing and reducing the strength of particular associations.

Similar to Croft *et al.*'s (2005) study which found positive degree assortment in a mixed sex population of wild guppies, the fish in this study were positively assorted by degree (those fish which had many direct associations tended to associate with those which also had many direct associations). The fish are unlikely to have formed this pattern according to spatial preferences based on olfactory differences (Ward *et al.* 2007), or site preference (Croft *et al.* 2003c) due to the compact nature of the pond area. Furthermore, there was a biologically significant difference between treatment groups after experiencing differences in the risk of predation. Those undergoing heightened risk of predation were more strongly assorted by degree. Commonly, social networks have been found to show a positive degree assortment (Newman 2002). This assortment has implications for the proliferation and maintenance of many important processes within a population. Assortative degree correlation produces a network structured by groups of well connected individuals with sparsely connected individuals on the periphery. This type of structure might suffer less disruption from the removal of particular, highly

connected individuals; has the ability to harbour disease, but may also reduce the global spread of disease by the restricted access to individuals outside infected clusters (Newman 2002). This might also be true for the spread and retention of information within populations. The natural environment of the Trinidadian guppy is a highly dynamic one with much human disturbance, severe yearly flooding and drought episodes and pollution incidents. The spread of information on environmental changes and novel adaptations might be expected to be of greater benefit than the maintenance of information which could become quickly outdated in such an environment. However, it may be costly to react to such a dynamic environment with reliability of information or lag-time contrasting with the individual's speed or ability to respond (DeWitt *et al.* 1998). Habitat selection and stable partner preference would enable an individual to reduce environmental fluctuations resulting in the need to retain locally relevant information within the group. Female guppies have been shown to exhibit site preference (Croft *et al.* 2003c) and stable partner preferences (Croft *et al.* 2004b) and may therefore be exhibiting active partner and social environmental choices in order to manage changing environmental conditions and deal with immediate threats.

Predation effects on network structure

The changes to the treatment group suggests that exposure to predation results in social networks which become more tightly associated in smaller clusters (increased scores for clustering and path lengths suggesting closely connected groups, separated by greater distances) and in which individuals are more tightly assorted by degree and dissassorted by behavioural phenotype. Fish in the predator networks exhibited significantly fewer links between individuals after treatment. A similar pattern (ie. a reduction in number of direct connections) was found in female social networks subjected to male harassment (Darden *et al.* 2009), but the decrease in association strength is opposite to that found in this study. However, when taking into account the ability of behavioural type to predict

association strength on day 12, it suggests that, in predation networks, at least, a reduction in association strength exists but only relatively; along the bold-shy behavioural type axis.

Since particular roles within networks are associated with network position (large degree is associated with global influence across the network, whereas degree strength suggests local influence (Hanneman and Riddle 2005)), any change to network structure will affect the way these roles are implemented and, perhaps, by whom. According to the structural change seen here with reduced degree but increased association strength, a change from global to locally influenced decisions might be expected. In spite of this there was no change to the centrality flow, which suggests that certain network features are maintained under relatively stressful environmental conditions.

In this study, under increased predation pressure, the shy females are likely to be the ones maintaining shoal cohesion (a familiar reaction towards predation described by Chivers *et al.* 1995) due to their increased tendency to shoal (a passive mechanism) and so could be seen to be directing the networks' anti-predator reaction. However, the formation of smaller shoals under conditions simulating increased predation threat, which continue to have a tendency to be negatively assorted by behavioural type (as they are in the wider social network), adds more weight to the suggestion that active choices are being made by these females. In fact the increased association strength, shown by the shy females, points to their involvement in the social network being the greater in terms of partner choice. It certainly comes as no surprise to find shy females choosing bolder individuals with which to forage under predation risk as bold females are thought to be better at finding food (Magnhagen and Staffan 2003; Dyer *et al.* 2009). The bold females, in return, are expected to gain from increased vigilance by the shy. In the binary choice tests for unfamiliar fish of differing type in chapter 4 the shy females were also more discriminatory in, choosing bold females with which to shoal, rather than the shy. The bold females showed no

preference for either type, suggesting it is the following behaviour of the shy which drives particular social behaviour within guppy networks.

Implications for cooperation

An increase in associations with fewer individuals might help to reduce conspicuousness to predators and exhibits association patterns akin to that which aids cooperation (Ohtsuki *et al.* 2006). Ohtsuki *et al.* (2006) found that cooperation will spread if the average number of network neighbours is lower than the benefit to cost ratio. Although the benefits of predator inspection increase under high levels of predation, as gaining an understanding of predator motivation will allow for a resumption of foraging, where appropriate, the costs will also increase. The overall reduction in degree points to an adaptive response towards the increased risk of predation. A reduction in the number of associates may allow familiarity to develop, aiding cooperation during inspection. In evolutionary models the social network structure shown to support the evolution and maintenance of cooperation is one of strong associations with a small number of partners in small hubs (Santos 2006b; Saavedra *et al.* 2009). This pattern compares well to observed female guppy associations. Female guppies show site fidelity (Croft *et al.* 2003c) and a strong ability to develop and maintain familiarity with small numbers of other females (Griffiths and Magurran 1997a and b); an ability which underpins the well studied cooperative acts seen in guppy predator inspection (Dugatkin 1988, Dugatkin and Alfieri 1991).

The difference along the bold-shy continuum in the strength of association corresponds with differences seen in bold and shy guppies such as in activity and exploration (Smith and Blumstein 2010) but also in inspection and shoaling behaviour (Croft *et al.* 2009). These differences between bold and shy individuals in the behaviours relevant to those required for the development of cooperation indicates that differences between the behavioural types extend to their tendency to cooperate; with active and less sociable bold fish

being likely to be less cooperative. Bergmüller *et al.* (2010) acknowledge, in their recent review, that there is much consistent variation in cooperative behaviour, which they link to variation along the bold-shy continuum and introduce tentative evidence pointing to a positive relationship between shyness and cooperation in the cleaner wrasse. McNamara and Leimar (2010) suggested that if inspection behaviour can be indicative of quality in a partner then bold and shy individuals will differ in their cooperative tendencies towards each other with those of higher quality interacting cooperatively more often.

Conclusion

The integrated pattern of interactions between individuals along the bold-shy continuum clearly shows that individual behavioural types gain from diverse associations which alter, adaptively, with changing environmental conditions. These social networks showed a response to an increased risk which was brought about by the differential responses of individuals within. The pattern of associations found here, and in combination with other chapters in this thesis, suggests that shy fish have an important role in directing patterns of associations, forming particular network structures. This work contributes to our understanding of the complexities of relationships within social systems, and the patterns present where cooperative acts are increasingly likely (ie. under increase predation risk). Further work could establish the combined effect of predation and male harassment by replicating this study with the inclusion of males. It would also be beneficial to introduce further contexts such as novel foraging, aerial predation threat or human related disturbance to measure if structural changes alter in a similar manner. This would give a fuller understanding of how the structural changes allow the guppy to adapt to the many influences experienced by wild populations on a daily basis.

4 Chapter 4

The effect of behavioural type and familiarity on association preferences in female guppies (*Poecilia reticulata*)

Abstract

Social animals tend to form non-random associations where individuals interact with certain individuals within their social environment more than others. The decisions regarding with whom to shoal have been shown to vary according to individual phenotype such as sex or body size. These differences alter the consequences of grouping with particular individuals in terms of predation, competition for food and reproduction. Some of the costs of grouping have been shown to be mediated by group assortment according to familiarity which can reduce aggression and competition and enhance predator elusion. However, the ability to develop and maintain familiar interactions may incur costs and individuals may make trade-offs between familiarity and other behaviours such as dispersal. These trade-offs may differ for individuals of different behavioural phenotypes. Laboratory bred bold and shy female guppies (*Poecilia reticulata*) were given binary choice tests to assess their preference for familiar versus unfamiliar stimulus shoals of the same behavioural type as them and for bold and shy individuals which were both unfamiliar. I found that neither bold nor shy females showed a preference for the familiar shoal. However, when given a choice of bold or shy females which were unfamiliar a clear preference did exist. The shy females showed a strong, significant preference for the bold individuals. The bold females, however, showed only a small biologically significant preference and for the shy females. This difference is similar to various other studies which show dissassortative pairing between types and which may be due to a producer-scrounger interaction between individuals. This variation according to behavioural type may impact on the ability for particular females to develop cooperative ability.

4.1 Introduction

A common phenomenon in many social animals is that the groups they form are made up of non-random clusters and pairings (Lusseau 2003; Croft *et al.* 2004b; Ward *et al.* 2002). This non-random structure stems from a tendency for certain individuals to associate together more often than with others within the population and for some individuals to be more widely connected than others (Krause *et al.* 2007). In guppies (*Poecilia reticulata*) these interactions appear to be driven by active partner choice rather than passive assortment (Croft *et al.* 2009). I hypothesise that the costs and benefits of forming stable associations will differ between individuals depending on their behavioural type. In particular bold exploratory individuals may show less of a tendency to develop familiarity as they are known to spend less time shoaling (Ward *et al.* 2004a) and form looser social associations (Croft *et al.* 2009).

Familiarity between shoaling fish has been found to influence shoaling decisions in favour of familiar over larger groups (Barber and Wright 2001), over kin (Griffiths and Magurran 1999) and has even influenced preferences for heterospecifics over conspecifics (Ward *et al.* 2003). Between members of a shoal familiarity has been found to provide a number of potentially adaptive benefits including a reduction in aggression which reduces competition (Utne-Palm and Hart 2000) and reduced predation by increased shoal cohesion (Chivers *et al.* 1995). Familiarity may develop due to context dependent interactions. For example, during antipredator behaviour individuals may learn the identity of others who were particularly co-operative (Milinski 1990; Dugatkin and Alfieri 1991). Group foraging provides a similar context and individuals may learn the identity of other based on competitive ability (Dugatkin and Wilson 1992; Metcalfe and Thomson 1995). Context-dependent familiarity is that which is formed during situations where partner choice may have implications for an individual's fitness (Dugatkin and Sih 1995); the

expectation being that the choice would be based on the particular abilities of another, enabling greater success for one or both individuals within that particular situation. In addition to developing context dependent familiarity, individuals may develop context independent familiarity, which may be based on both visual and olfactory cues. Familiarity, based on individual recognition, can take time to develop (Griffiths and Magurran 1997a), requires individuals to be fairly static in the social environment and is limited as to the number of individuals with which it can develop (Griffiths and Magurran 1997b). More recent work suggests that individuals may use global habitat cues when making shoal choice decisions and generally prefer to associate with others from a similar habitat (Ward *et al.* 2004b, Ward *et al.* 2007).

A pre-requisite to social and habitat familiarity is the ability to learn to discriminate either through visual recognition of particular individuals or a more general ability to recognise that an individual shares a similar environment. Individuals at the poles of the bold-shy continuum have been shown to differ in the manner in which they learn and in how they interact socially, both are likely to impact on their propensity to develop social familiarity. Studies have shown that behavioural types differ in the speed and manner in which they learn. For instance the proactive-reactive studies carried out on mice and rats found that the proactive (bold) animals quickly formed routines and tried to alter their environment whereas shy individuals appeared more in tune to subtle environmental changes (Koolhaas *et al.* 1999). Marchetti and Drent (2000) found the ability to alter food search patterns with a change in its regular distribution differed within and between great tit (Parus major) behavioural phenotypes according to the social environment. Sih *et al.* (2004) suggest that by linking the two opposing views regarding personality and learning, bold individuals might be expected to learn novel tasks better and shy individuals might be better at sensing environmental changes within a familiar task. The reported differences in the manner by which bold and shy individuals behave socially (Ward *et al.* 2004b; Magnhagen

and Staffan 2005; Harcourt *et al.* 2009) will impact on their ability to learn from others.

The level and forms of interaction which take place within a population has already been shown to differ across behavioural phenotypes. In two freshwater fish species shy fish form stronger associations with more individuals than bold (Croft *et al.* 2009) but bold fish interactions were more widespread within the network (Pike *et al.* 2008). How individuals interact depends not only on their own behavioural phenotype but that of all the others within the population with which they associate. The level of preference for familiar fish may differ in accordance with the differing priorities revealed by bold and shy behavioural repertoires, however this hypothesis remains untested. The aim of this study is to answer two main questions. Does a fish's position along the bold-shy continuum affect how it decides to shoal when faced with the choice of a shoal which is familiar against one which is unfamiliar? How do the behavioural types of both the choosing and chosen individuals interact in the decision to join another fish? This investigation focused on female guppies, which were decedents of a wild, high predation population. Female guppies are ideal for this investigation as they exhibit preferences for familiar fish (Magurran *et al.* 1994c); form stable pairs in the wild (Croft *et al.* 2004b) and cooperate during predator inspection (Magurran and Nowak 1991). Moreover female guppies show repeatable differences in boldness (see Chapter 3) which is known to influence patterns of social association (see Chapter 3).

4.2 Methods

The experiment consisted of two treatments to which each focal individual was exposed: 1. a choice between a familiar or unfamiliar stimulus shoal of two females of the same behavioural type, designed to measure differences between bold and shy fish in their preference

for familiar fish; 2. a choice between unfamiliar bold or shy individual females, testing for differences in preference for bold or shy individuals depending on the behavioural type of the focal fish. The females tested were from laboratory stock of wild caught (Aug 2006) Trinidadian guppies from the lower Aripo river (an area of high predation risk) and were all similar in body length (average mean body length within home tank± average s.d. = 32.49±1.7).

Assessing behavioural phenotypes

Boldness was assessed according to an individual's reaction to risk on day 0 and day 14. Previous work in guppies has demonstrated that individuals consistently differ in their response to a simulated aerial predation attack (Dyer *et al.* 2009). All fish were left to feed for an hour prior to testing to control for state dependent variation in behaviour). During testing individuals were placed in the test tank (30x20x15cm water depth) and allowed to settle for 5 minutes. A small stimulus shoal, which had been previously acclimatised to the test conditions, was placed, enclosed (10cm diam x 14 cm depth of water) to one side of the test area, which was surrounded by opaque screening throughout. This method was used to reduce stress in the focal individual and also to maintain the context in which most of the fish's behaviour is carried out naturally (Malloy *et al.* 2005). A weight (suspended on monofilament line) was then released from a height (60cm) above the tank bottom, which dropped centrally into the tank, simulating an aerial predation attack by a bird. The time taken for the female to resume activity was recorded and used as a measure of boldness. Body length was measured by taking a photograph of the test fish in a small, clear, plastic container with 1.5 cm water with a 1mm grid placed underneath. After testing the test fish was individually housed in a small holding container, to ensure individual identification. When all tests were complete test fish were assigned to a "home tank". A total of 96 fish were tested. Individual drop test score was not correlated with body length of fish ($r= 0.069$, $p=0.565$, $N=72$).

Housing during familiarisation

Social groups were housed in a home tank (30x20x20cm water depth) which contained an air-stone, gravel and a plant in aerated water of approximately 24°C. A total of 18 social groups were established, 10 consisting of 4 bold fish and 8 consisting of 4 shy fish (test fish N=72). Bold individuals were defined as those which became active in less than one minute and shy were individuals which did not move until after two minutes. As individuals could not be identified once they were placed into their "home tank", the drop test results were amalgamated within home tanks for day 1 and separately for the repeat test on day 14 Repeatability results, therefore, would indicate that individuals maintained their behavioural phenotypes as a group ensuring preferences were a valid choice between bold and shy individuals. All females used in the experiment were of a similar body length (within tank mean body length ± s.d.: bold tanks – 32.35±1.8mm and shy tanks – 32.67±1.6mm). Previous work has shown that context independent familiarity takes up to 12 days to develop in female guppies (Griffiths and Magurran 1997a) and so females were left together in their housing tanks for this period before choice tests commenced.

Preference tests

In all tests a standard binary choice was used to examine association preferences. Testing took place on day 13 in a tank (90cm x 40cm x 6cm water depth), with 15cm at both lengthwise ends separated from the rest of the tank by perforated clear plastic, allowing visual and olfactory contact between fish (see figure 4.1a). An area in front of the barrier at both ends marked by the dotted line (figure 5.1e) was the "shoaling section". This section, 10cm lengthwise, marks the area within which the focal fish can be defined as associating with the stimulus female (s) as it lies within four body lengths of the area containing the stimulus individuals. This inter-individual distance is commonly utilised to delineate the presence of interactions between shoaling individuals (Pitcher *et al.* 1983).

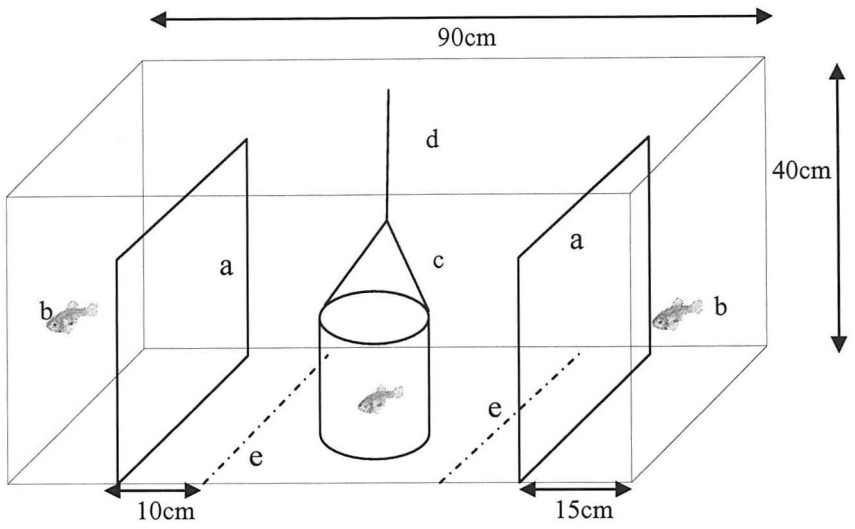

Figure 4.1: Experimental set up for preference tests of individual fish. Both ends were isolated by a) a perforated clear plastic barrier. Behind the barrier at both ends was placed b) either a single female (preference for behavioural type test) or a stimulus shoal of two females (preference for familiars test). The focal fish was enclosed in the circular container (c) for 5 minutes prior to testing after which it was raised (by a remote pulley system (d)) and the fish allowed to swim freely around the central area. The data recorded was the amount of time spent within the "shoaling section" between line e) and the barrier a) at both ends.

Pairs (familiarity test) and individual (bold-shy preference test) females were used as stimulus fish, as relatively small groups tend to be the most common in nature (Krause & Ruxton 2002). Also, Ward *et al.* (2004) found that when fish are given a choice of large shoals, of a similar phenotypic mix, they make a choice from those individuals closest to them. So the choice may often be made based on a smaller number of individuals. The familiarity test used small shoals as a stimulus in line with previous familiarity tests. For the bold-shy preference tests, however, only single fish were used. This was to avoid the focal fish being attracted to the interaction between all bold

or all shy stimulus individuals and so allowing for the results to be clearly defined as a preference for individual behavioural type alone. Prior to all preference testing, fish were given an hour to feed, undisturbed, at the beginning and, again, half way through a day's testing, again, to ensure variation in behaviour is not affected by differences in hunger levels. During testing two video cameras (Sony handicam DCR-DVD106E and Sanyo Dual camera VPC-WH1) were stationed 1m above the tank floor, so as to collect images from two test tanks at once. The cameras were switched on by a concealed observer after one of the focal individuals being tested had been observed to have visited both stimulus fish.

Familiarity tests

The tank end compartments (figure 4.1b) were occupied by two females from either the same tank as the focal fish (familiar) or a separate tank (unfamiliar). All familiarity tests were carried out using an unfamiliar stimulus shoal that was of the same behavioural phenotype (bold or shy) as the test fish. Care was taken to ensure both tanks consisted of similar size fish. At the beginning of each new test half a cup of water from the home tank of the stimulus shoal was added to their compartment before the focal fish was introduced in fresh water to aid olfactory information about the stimulus fish. The focal female was placed into a clear plastic cylinder (diam 8cm) in the centre of the middle section of the tank (figure 4.1c) where she was left to settle for 5 minutes before being released, using a remote pulley system (figure 4.1d), to explore the entire central section of the testing arena. Testing began after she had visited both stimulus shoals and continued for 10 minutes. Once testing was completed the focal fish were returned to their home tanks where tested and untested fish were separated by a perforated plastic barrier to ensure fish could be identified for their roles during the next set of tests, which took place after the afternoon feeding hour. The stimulus fish were left in the test tank area for four tests (testing each of the remaining fish left in both home tanks used) before being placed back into their home tanks. The

end of the tank to which the familiar and unfamiliar stimulus fish were assigned differed between the first two fish tested from each home tank and the last two. Fish were defined as interacting socially if they were observed within four body lengths of the stimulus fish area (similar to Pitcher *et al.* 1983). From the footage I calculated percentage of shoaling time spent with the bold and, separately, the shy female.

Preference for type tests

For this test the tank end compartments (figure 4.1b) were occupied by a single stimulus female (one bold and one shy) both unfamiliar. Testing followed the protocol described above in the familiar preference tests. The end of the tank to which the stimulus fish were assigned was alternated so that fish from within a home tank experienced the bold and shy fish at differing sides. All fish in the home tank were tested in both set-ups over a period of two days.

Statistical analysis

Drop tests for each individual were averaged within tank and a Pearson correlation used to ascertain the relationship between the scores on day 1 and day 14. The preference measure (for both familiarity-unfamiliarity and bold-shy tests) was given as the proportion of the total time spent shoaling. That is, the proportion of time spent within either shoaling section close to both stimuli. As such, the results given for time spent with the familiar shoal can be assumed to be 1- time spent with the unfamiliar shoals, similarly for bold and shy. Differences in the level of preference for one over the other of the stimulus fish were calculated using a mixed between-within subjects ANOVA. Effect sizes (E.S.) and confidence intervals (CI) for repeated measures ANOVAs (Cortina and Nouri 2000) were also calculated to provide an indication of the biological significance of the results. This is in line with recent encouragements to utilise results which have more meaningful biological inferences (Stoehr, 1999; Wilkinson, 1999; Gardner and Altman, 1986). E.S.s for Pearson's correlations,

together with their CIs, were calculated according to Altman and Gardner (1988). All analyses were carried out using SPSS (version 14 2005). Tests were corrected when appropriate for multiple testing using Benjamini and Hochberg's (1995) corrections.

4.3 Results

Behavioural phenotypes

Average within-tank drop test results, which provide the scores along the bold-shy continuum, were strongly and significantly correlated (r= 0.763, p=0.006, N=18, CI: 0.460 to 0.907) and tanks within bold and shy groups continued to differ in their average tank score across the 18 day testing period (figure 4.2).

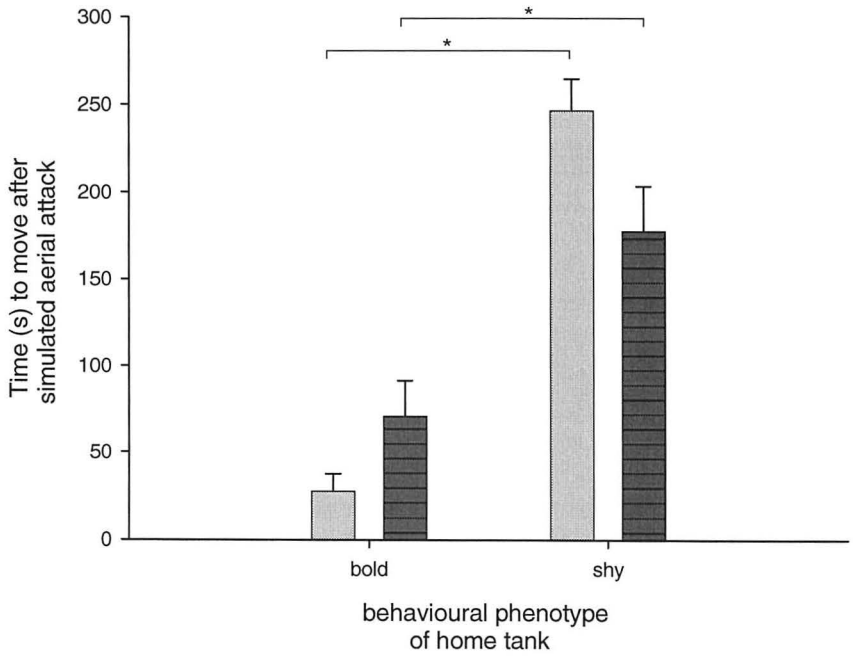

Figure 4.2: Drop test variation between phenotypic groups showing significant differences in median (± interquartiles) tank score for tests taken on day 1 (grey bar) and day 18 (striped bar).

Preference for a familiar shoal

There was no significant preference for shoaling with either familiar or unfamiliar females across or within behavioural phenotypic grouping (mixed between-within subjects ANOVA: time shoaling with familiar/unfamiliar female – $F_{(1,63)}$=0.855, p=0.359; time shoaling with unfam/fam female*bold/shy focal – $F_{(1,63)}$=1.523, p=0.222). The effects size for the difference in time spent shoaling with unfamiliar and familiar shoals between bold and shy individuals (E.S., CI: 0.638, 0.527 to 0.748), however, shows a medium E.S. with narrowly spaced CIs, which do not cross zero, indicating a small but biologically significant result. Further investigation shows a biologically significant result exists, but only in shy females (E.S.+CIs: shy = -1.597, -0.854 to -2.340; bold = 0.209, -0.335 to 0.753), which spent more time with the *unfamiliar* shoal (mean±s.d.: familiar shoal – 0.403±0.346; unfamiliar shoal 0.597±0.346) contrasting with bold focal females which showed no significant preference but which spent a greater proportion of time with the familiar shoal (mean±s.d.: familiar shoal – 0.514±0.364; unfamiliar shoal 0.486±0.364).

Preference for particular phenotype

Across both phenotypic groups there was no significant preference for the behavioural phenotype of the stimulus female (mixed between-within subjects ANOVA: time shoaling with bold/shy – $F_{(1,54)}$= 2.318, p=0.134). The interaction between focal type and the time spent with one behavioural type over the other showed a significant result ($F_{(1,54)}$= 6.090, p=0.017). This is accompanied by a large effect size and confidence intervals which do not include zero (E.S. and CIs: -1.300, 0.832 to 1.759) (figure 4.3). Shy focal fish spent significantly more time with the bold stimulus female than with the shy female (E.S.+CI: 3.013, 1.982 to 4.044); the bold focal females showed a preference towards shy stimulus females (E.S.+CI: -0.871, -0.261 to -1.481), but the biological significance is relatively small.

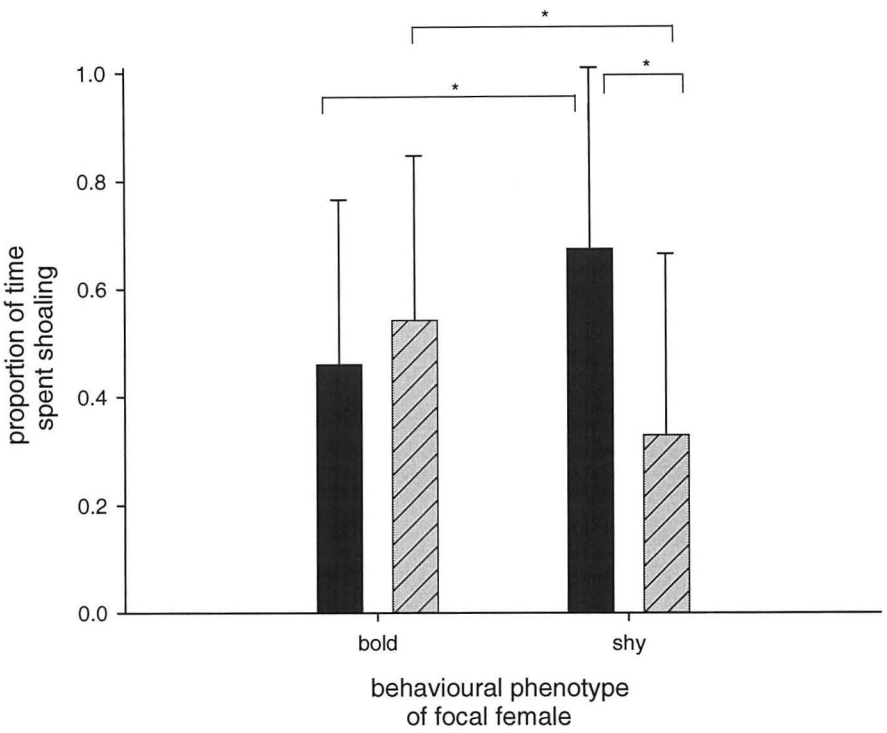

Figure 4.3: The difference between the means of bold and shy focal fish in their preferences for a particular individual, when given the choice of either a bold (black bar) or shy (striped bar) individual stimulus female. Bold fish showed a small biologically significant preference towards shy females, whereas shy fish spent a significantly greater proportion of time close to the bold fish. The proportion of time spent shoaling with either one of the stimulus individual phenotypes also significantly differed between the focal fish of differing behavioural phenotype.

4.4 Discussion

Shy females showed a significant preference towards an unfamiliar bold female (or avoidance of an unfamiliar shy female), whereas bold fish in contrast did not differentiate in a statistically significant way between bold and shy stimulus fish. In contrast to previous studies no significant preference for familiar shoals was observed.

The decisions individuals make concerning joining, staying with and leaving a group are important not only personally, but also in terms of the wider population. The consequences of non-random

group formation are expected to impact on many important processes such as the transmission of communicable diseases (Cross *et al.* 2004) and information (Lusseau 2007) and the maintenance of cooperation (Santos *et al.* 2006b). Individuals have been shown to differ considerable in their behaviour according to their position along the bold-shy continuum which has been shown to influence how they react socially. Bold fish had fewer but wider associations (Pike *et al.* 2008) and shy fish formed strong associations (Croft *et al.* 2009). However, mixed groups were the most successful at finding and foraging on novel food (Dyer *et al.* 2009). If these behaviours were to impact on the preference for certain individuals, this may have consequences for cooperation within and between behavioural types.

Preference for bold/shy females

A strong, active partner choice was shown by only the shy individuals in this study. This preference is perhaps expected in light of other behavioural trait correlations with shyness, such as a higher shoaling tendency (Ward *et al.* 2004a), stronger associations with more individuals (Croft *et al.* 2009), better following behaviour but less initiative (Harcourt *et al.* 2009) in comparison to bold individuals. This supports the suggestion made by Dyer *et al.* (2009) that the bold-shy behavioural axis is representative of the producer-scrounger phenomenon in guppy females. The authors found not only that bold and shy pairs foraged together and gained benefits as a group, from this pattern, but that it was shy fish which followed a bold individual in a foraging task. Together with this work the indication is that shy females actively discriminate in partner choice to enhance foraging benefits, but bold females show no clear discrimination. Furthermore, the dissassortative structure seen in female social networks in chapters 3 and 6 indicates that this active choice is prevalent, and is perhaps enhanced in the face of increased predation pressure. It appears, therefore, that shy females might also direct the network's response to increased predation risk. The relative lack of discrimination in partner choice by bold females may be due to a trade-off between the

development of a strong preference in order to exploit others with foraging innovation and the ability to explore new habitats, which is often not conducive with maintaining social cohesion.

It is interesting to note that the females in this study were lab reared (in predator free environments) from a small number of wild guppies caught from a high predation environment three years previously. This suggests that these preferences are likely to be heritable and possibly prevalent in all populations, but which are enhanced under high predation pressure. It is likely that this preference is a fundamental strategy by shy fish to gain resources from superior foragers. The mechanism used by shy fish to differentiate between bold and shy fish is not apparent from these results but provides an interesting avenue for future research. One possibility is that the bold and shy fish differ in activity patterns and this is used as a cue by the shy fish.

Lack of preference for familiar shoals

It is surprising that no statistically significant preferences for familiar shoals were found in this study given the wide spread and well documented preferences for shoaling with familiars (Griffiths and Magurran 1997a and b; Ward *et al.* 2009). One possible explanation for the lack of preference for familiars in this study is that the association preferences could have been confounded with kinship. Given that the fish were founded from the same small group of wild caught individuals (n=25), it is possible that inbreeding may have occurred and that all fish used in the tests were closely related. Whilst previous work has documented social preferences for kin in juvenile guppies (Hain and Neff 2007) these results are far from conclusive and for some populations it appears that familiarity is more important than kin recognition (Griffiths and Magurran 1999).

Finally, the housing conditions prior to testing might have altered preferences in fish, which may have previously shown a preference for familiars. In contrast to previous studies this investigation housed fish in groups consisting of a single behavioural

type. It is possible that different results could have been observed if a mixed strategy group was also included in the experiment. Future research exploring this possibility is eagerly anticipated.

Conclusion

This work highlights the importance of studying individual interactions in relation to what takes place within groups, and populations. Clearly group composition impacts bold and shy females differentially in terms of growth which will have important life-history consequences (Chapter 6). Understanding the choices individuals make with regard to their shoaling partners is, therefore, important. This choice will influence individual interactions such as cooperative ability, which impacts on foraging and survival but will also affect the group behaviour depending on the mix of individuals (Sih and Watters 2005; Dyer *et al.* 2009).

5 Chapter 5

The effect of behavioural phenotype and familiarity on mate choice in male guppies

Abstract

Male guppies (*Poecilia reticulata*) alter their courtship and interest in females according to varying circumstances which suggests they are making trade-offs between the costs of displaying and the benefits of acquiring matings. This cost can be reduced by directing courtship towards females which are of a particular quality and/or which have not been previously encountered. Males of differing behavioural phenotypes might be expected to vary in their choices of mate due to the suggested link between behavioural phenotype and life history priorities; shy males favouring future over current reproduction and bold the opposite. It may also be due to the commonly seen fitness benefits of type assortment. Using a binary choice test, males with a tendency to be bold or shy in their average behaviour were given a choice between individual familiar and unfamiliar, bold and shy females. They were allowed 12 days to develop familiarity with females before being tested for preferences for females which were from a different compartment within the same tank or from a different tank. Male preferences were found to vary according to their own bold-shy tendencies, the behavioural phenotype of the female and the level of habitat familiarity which they shared with the female. Males with an average boldness score preferred to shoal with bold females when they were from a familiar tank environment and males with a mean shy score showed the opposite result. When the females were from unfamiliar home tank environments this result was switched. This study shows the importance of considering the affect of behavioural phenotype of both focal and stimulus individuals in behavioural tests, especially in the context of mate choice.

5.1 Introduction

Mate choice is often dominated by the sex which has invested more in reproduction (e.g. gamete production, provisioning of the egg and/or young) and this is usually the female (Stearns and Hoekstra, 2005).

However, choosiness is predicted to be employed by both sexes simultaneously when both show variance in mate quality and the chances of finding mates is high (Parker 1983; Hubbell and Johnson 1987). Male mate-choice occurs when, together with some form of depletion of sperm reserves after mating, choices in female quality exist amongst which males are able to discriminate and there is a link between quality and other particular characteristics in the females (Andersson 1994).

One strategy polygamous males use to increase their reproductive success is to mate with novel females. A male's ability to recognise familiar individuals would, therefore provide a rule of thumb method of avoiding interactions with those females with which he has previously associated and perhaps mated. The development of familiarity in male guppies (*Poecilia reticulata*) has already been shown to occur (Kelley *et al.* 1999). However, the authors showed greater preferences occurred in males which had recently experienced limited access to unfamiliar females. Males which had experienced no limitations showed no preference. Griffiths and Magurran (1998) suggest that due to sexual asymmetry in mating costs females and males are expected to develop familiarity to differing degrees.

One possible mechanism that individuals may use for differentiating between familiar vs unfamiliar potential mates is the use of global habitat cues. Habitat familiarity has been shown, in the absence of visual cues, in stickleback (*Gasterosteus aculeatus*), which preferred other individuals on the basis of diet and habitat odours (Ward *et al.* 2004a) and this process has also been demonstrated in wild populations (Ward *et al.* 2007). As well as the ability to recognise novel females through habitat familiarisation, however, the male would benefit from an ability to direct his gametal dispersal towards fitter females when available. The presence of differences in reproductive quality in females, together with a recognisable indication of this quality, would provide males which discriminate with greater reproductive success than a more generalised mating strategy.

One cue that may be used as a signal of quality is individual behavioural phenotype. Behavioural types are traits which are both variable and easily observed, especially when they are correlated into behavioural syndromes (Sih *et al.* 2004). Indeed the very existence of behavioural types and syndromes might stem from the variation in life history strategies which are indicative of a wide range of differences within and between the sexes (Wolf *et al.* 2007). Boldness, a commonly studied trait reflecting a reaction to risk (e.g. inspection of a predator or emerging into a risky environment), has been positively linked with general activity (Bell 2005; Smith and Blumstein 2010) and aggression (Huntingford, 1976; Johnson and Sih 2007). Both these behaviours are conspicuous when present or absent (i.e. in shy individuals), providing ample indication as to an individual's behavioural make-up. Indeed previous work has demonstrated that boldness may influence mate choice in females. For example, Godin and Dugatkin (1996) observed that female guppies preferred to mate with bold male guppies which had recently inspected a predator. The authors suggest that this choice may reflect male quality (production of viable offspring) as bold males were able to effectively avoid predation. Other work has shown that boldness can be indicative of fitness (Réale *et al.* 2000; Smith and Blumstein 2010) but this can be dependent on environmental conditions and/or sex (Réale and Festa-Bianchet, 2003; Dingemanse *et al.* 2004). Behavioural type might not necessarily provide information on the fitness of a mate, however. It may, instead, provide another measure of quality, similar to that provided by familiarity, that of the fitness of the combined types. The combination of same-type mates was found to be correlated, with good fledgling condition and offspring surviving to breeding in great tits (Parus major) but only in those males and females exhibiting the extremes in exploratory behaviour (Dingemanse *et al.* 2004; Both *et al.* 2005). In individuals, which show no parental care, however, mate choice can only be directed towards quality of gamete provisioning and genetic fitness of offspring (Halliday 1983).

Male mating behaviour in the guppy can be costly, especially under increase predation risk. Males perform a mating display which is highly conspicuous to predators (Endler 1980 and 1987; Magurran and Seghers 1990) and costly in terms of energy (Abrahams 1993). They tend to prioritise mating over foraging (Magurran and Seghers 1994b) and so develop bright colours to attract females but invest little in growth past maturity (Houde 1997). This results in them being an easily seen and handled prey throughout their adulthood. They, therefore, must make a trade-off between mating and survival, the costs and benefits of which are expected to differ with varying levels of predation risk and is state dependent to varying degrees (Magurran and Seghers 1994b).

Indeed, female mate choice, in the guppy, has been shown to occur at various levels, from the active receptivity towards colourful males to cryptic choice post-copulation (reviewed in Magurran 2005). Males, however, invest more of their energy towards finding and displaying to potential mates (Endler, 1983). With displays per male reported as being as much as 13 times and gonopodial thrusts 0.5-3.0 times every five minutes in some wild populations (Farr, 1975), males have been viewed as the less choosy rather more indiscriminate partner. However, males do exhibit mate choice and have shown preferences for females according to novelty (Kelley *et al.* 1999) and size (Dosen and Montgomerie 2004). Female size has been linked to fertility with larger females being more fecund (Pitcher and Hart 1982). The multitude of mating combinations, together with the differing reproductive priorities between the sexes makes this choice extremely complicated.

The aim of this study is to ascertain if differing male behavioural phenotypes discriminate between females which also differ in their behavioural phenotype. Bold and shy individuals differ in the way they react in various social situations such as in response to tutors (Marchetti and Drent 2000; Dugatkin and Alfieri 2003) or aggressive opponents (Verbeek *et al.* 1999) and in how they tend to associate within the wider population (Pike *et al.* 2008; Croft *et al.*

2009). Bold and shy individuals, might, therefore, also be expected to differ in their choice of mates, with consequences for the maintenance of variation in behavioural phenotypes. The heightened predation risk faced by male guppies due to their colour (Endler 1980) and courting behaviour (Magurran and Seghers 1990b) might suggest the acknowledged preference for novel females might be influenced by the presence of a perceived threat. Male choice is therefore expected to alter across testing environments.

5.1 Methods

The study was carried out using wild-caught guppies caught in May 2009 from the lower reaches of the Quare (N10° 40′ W61° 12′), a river in the Northern Mountain Range, Trinidad. This river is characterised as high predation due to the presence of the major guppy predators *Crenicichla frenata, Aequidens pulcher* and *Hoplias malabaricus* (Magurran and Seghers 1990a). Adult guppies, of similar size within sex (mean body length within compartments ± s.d.: males – 16.39±0.96mm; females - 22.15±0.9mm), were caught in two-metre seine nets from pools spread over a ~100m stretch of river. Fish were housed separately, according to sex, at no more than 50 individuals per tank (90cm x 30cm x 25cm water depth), in the laboratory for two days prior to the onset of testing. Tests were carried out in two replicates. All fish were fed commercially available flake food twice each day throughout the testing period, in the morning (1 hour prior to testing on test days to control for state dependent variation in behaviour) and in the late afternoon.

I quantified the boldness of individual fish by examining their response to a simulated aerial predation strike. A small stimulus shoal, which had been previously acclimatised to the test conditions, was placed, enclosed to one side of the test area (35cm; water depth 10cm). This was used as a method of reducing stress in the focal individual and also to maintain the context in which most of the fish's behaviour

is carried out naturally (Malloy *et al.* 2005). After a 5 minute settling period, where the focal individual was allowed to roam freely within the test area, a weight (attached to a length of fine twine and released remotely) was dropped from a height (80cm) directly above the tank centre. Test fish stopped moving in response to the simulated predation attack and the time taken to resume movement was recorded as a measure of boldness. Previous work has shown that the response of the test fish to the simulated aerial predator is a repeatable behavioural trait that differs between individuals (Croft *et al.* 2009). Fish were then assigned to groups based on their behavioural scores and within a group all fish were given an individual identity mark (see next section) using visual implant elastomer (Croft *et al.* 2003c), this process has previously been demonstrated to have no affect on shoal choice behaviour in females (Croft *et al.* 2004b). Behavioural phenotype was found to be close to significantly repeatable over the testing period across all the females ($r= 0.202$, $N=90$, $p=0.056$). Using the average of the two drop tests we found that within each testing tank the females continued to show substantial differences in behavioural phenotype (Wilcoxon Signed ranks test: familiar test – $Z= -5.548$, $p<0.001$; unfamiliar test – $Z= -5.462$, $p<0.001$) ensuring the males were given a choice of females which continued to show wide behavioural variation.

All fish tested for type but not used were released into the UWI ornamental pond.

Developing familiarity

Two tanks (90cm x 30cm x 15cm) were subdivided into three sections (29cm x 30cm x 15cm water depth) and were used to house individuals throughout the testing period. For each replicate, 56 individual females were tested and ranked according to their score. The 18 boldest (i.e. the quickest to move) and the 18 shyest (i.e. the slowest to move) fish (N=36) were marked individually and assigned to one of 6 separate home compartments. The boldest six females to move after the drop were placed separately into compartments 1-6,

then the next two groups of six and likewise for the shyest 18 females. Each compartment therefore contained three bold and three shy individuals. This was repeated on four occasions (total N= 144) to establish 24 social groups. The social groups underwent familiarity testing on days 4,8 and 12 (not mentioned further) before two of the fish were removed (one bold and one shy female which were less similar in size to the other fish within the compartment) these fish were replaced with one shy and one bold male (see next section).

The males were tested in two replicates. In each replicate 36 individual males were ranked according to their boldness score. The boldest 12 males were allocated to 12 of the female groups and the shyest 12 males allocated to 12 of the female groups. Each compartment, in all, contained three bold and three shy individuals of female: male ratio 2:1. This process was repeated (total tested N= 68) to create 2 sets of male fish with N=46 individuals being assigned to 23 compartments in total (1 compartment had 1 female loss due to illness together with obvious sickness in another female and so was kept out of the study). The fish were left to familiarise with the females for 12 days before preference tests commenced.

Male familiarity testing

Testing for preferences took place in a tank (60cm x 30cm x 6cm water depth), with 10cm at both lengthwise ends separated from the rest of the tank by perforated clear plastic, allowing both visual and olfactory contact between fish (see figure 5.1a) shown to be important in male mating behaviour (Guevara-Fiore *et al.* 2010). The tank end compartments (figure 5.1b) were occupied by a single stimulus female (one bold and one shy). The male was exposed to two consecutive tests, with the male being moved directly from a choice of "familiar" females which originated from the same tank (but not the same compartment) to unfamiliar ones originating from another tank within the same set. The female stimulus fish were left in the test tank area for both tests before being placed back into their home tanks. The end

of the tank to which the stimulus fish were assigned and the order of testing was balanced among replicates.

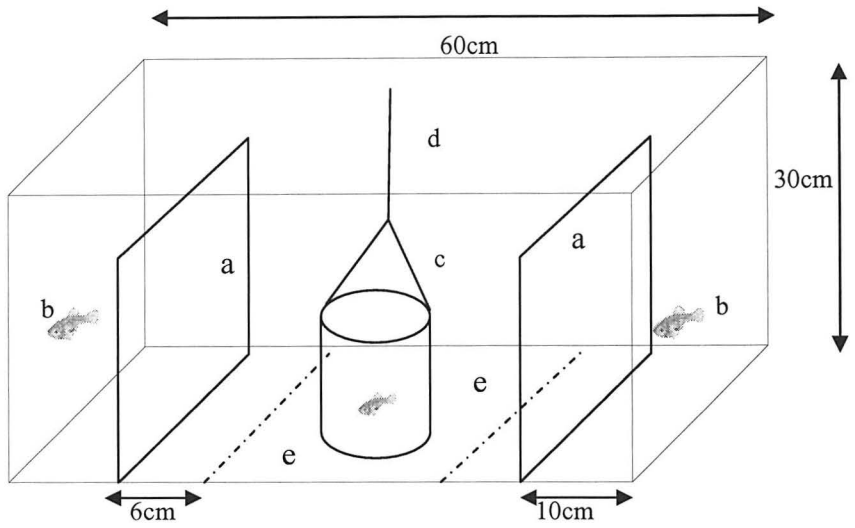

Figure 5.1: Experimental test tank (60cm x 30cm x 6cm water depth) for preference tests of individual fish. Both ends were isolated by a) a perforated clear plastic barrier. Behind the barrier at both ends was placed b) a single female. For the preference tests each end section house a single bold or shy female which originated from the same tank (test 1) or a different tank as the focal male (test 2). The focal fish was enclosed in the circular container (c) for 5 minutes prior to testing after which it was raised (by a remote pulley system (d)) and the fish allowed to swim freely around the central area. The data recorded was the amount of time spent within the "shoaling section" between line e) and the barrier a) at both ends.

Two Sony handicam (DCR-DVD106E) video cameras stationed above two test tanks (130cm from the tank floor) were used to video each trial. The stimulus fish were at either end of the test tank. Following introduction of the stimulus fish, the focal fish was placed into a clear plastic cylinder in the centre of the middle section of the tank (figure 5.1c). All fish were left to acclimatise to the test tank for 5

minutes before the focal fish was released, using a remote pulley system (figure 5.1d), to explore the entire central section of the testing arena. The cameras were switched on remotely after one of the focal individuals had been observed to have visited both stimulus fish and returned to the centre. The camera was left to record the fish's movements for 10 minutes, after the second male had visited both end "shoaling sections" (figure 5.1e), before being switched off, marking the end of testing. The section, indicated by a dotted line in figure 5.1e, highlights a distance of 6cm from the barrier enclosing the stimulus fish. This area of the tank is entitled the "shoaling section" and marks the area within which the male fish can be defined as associating with the stimulus female as it brings him to within four body lengths of the section in which she is contained. This inter-individual distance is commonly utilised to delineate the presence of interactions between shoaling individuals (Pitcher *et al.* 1983). For each test fish I calculated the percentage of shoaling time spent with the bold and the shy female.

Behavioural phenotype

The males showed no repeatability over the testing period ($r= -0.058$, $p=0.705$, $N=45$). Given that the measures were not repeatable, I calculated the mean test score and examined its ability to predict behaviour in a different context, shoaling behaviour. The average male drop test was significantly correlated (after Benjamini and Hochberg corrections) with the percentage of the total shoaling time spent with bold and shy females from a familiar habitat. The behavioural score used was, therefore, the average drop test score. The use of the average behavioural score has been suggested by Dingemanse et al (2010) in their work discussing the wide variation in behavioural plasticity shown by many animals in studies of personality traits. Although this suggestion is perhaps for use when the repeatability result is greater than the one seen here, the ability of the average score to predict shoaling behaviour in this study suggests this is biologically significant measure.

It can be argued that, due to lack of significantly repeatable behaviour, the use of terms such as "bold" and "shy" ought not to be used in this study. However, the males' risk-related behaviour is clearly related to their shoaling behaviour (seen previously in Croft *et al.* 2009) and both these behaviours have been shown to be repeatable (Croft *et al.* 2009; Dyer *et al.* 2009). All the drop test results in the present study showed a small to moderate relationship with shoaling (initial drop test: r= -0.216, p=0.153; repeat drop test: r= -0.258, p=0.087), which indicates that these males are making decisions about shoaling on the basis of their reaction to risk. Furthermore, taking only the 12 most extreme individuals from both phenotypes and which had the most stable drop test results (r=0.532, p=0.007, N=24), similar, but non-significant, correlations with shoaling behaviour are apparent using the average drop test measures (familiar test - r= -0.294, p=0.164; unfamiliar test – r=0.256, p=0.228). For this reason I feel the use of the terms bold and shy is warranted, but acknowledge that they can not be seen to be clear descriptors of personality in this study.

Statistical analysis

Spearman's correlations were used to test for the repeatability of boldness scores between behavioural tests. Spearman's correlations were also used to quantify the relationship between male behavioural type and proportion of the total shoaling time spent shoaling with the bold females in the familiar and unfamiliar tests. All statistical analyses were carried out using SPSS for WINDOWS (rel.14.0.0 2005). For analysis of differences between correlation coefficients a Z-test was used according to the formula in Zar (1999). Effects sizes (E.S.) and relevant confidence intervals (CI) are included in the analyses to ensure adequate biological significance can be ascertained from the results, in line with several recent arguments for their inclusion across several fields (Stoehr, 1999; Wilkinson, 1999; Gardner and Altman, 1986). E.S.s for Spearman's correlation together with their CIs are calculated in accordance with Altman and Gardner

(1988). Finally, the effect size for the Z-test was calculated using the Chi-square conversion formula in Rosenberg (2010) which converts Chi-square results for two-group comparisons into correlation coefficients (an appropriate effect size estimate). All analyses were carried out using SPSS (version 14 2005). Corrections for multiple testing were carried out, where appropriate, using Benjamini and Hochberg's (1995) false discovery rate corrections.

5.3 Results

Preference tests

As the measure of preference is a proportion of total time shoaling with both stimulus individuals, it follows that the proportion spent with one individual is exactly opposite that of the other. In light of this, all results relating to the proportion of time spent with individuals will concentrate on the bold stimulus female with the opposite being assumed.

As mentioned previously, male behavioural phenotype score was significantly negatively correlated with the proportion of time spend with the bold female from a *familiar* habitat ($r= -0.359$, $p<0.017$, N=45, CI: -0.073 to -0.590) (figure 5.2a). The confidence limits for the effect size do not cross zero but do show a wide distribution, likely to be due to the small sample size. Those males, which tended to move quickly, on average, after a simulated aerial predation attack (bold) tended to prefer to shoal with bold females and conversely shy males preferred shy females. In contrast, when the males were given a choice of shoaling with *unfamiliar* females (figure 5.2b) there was a tendency for the preferences to be reversed with a marginally non-significant correlation between the males' boldness score and the time spent with the bold female ($r=0.296$, $p=0.051$, N=44, C.I. -0.001 to 0.545, s.e. from z-transformation = 0.156), which is reflected in the confidence intervals, which just include zero.

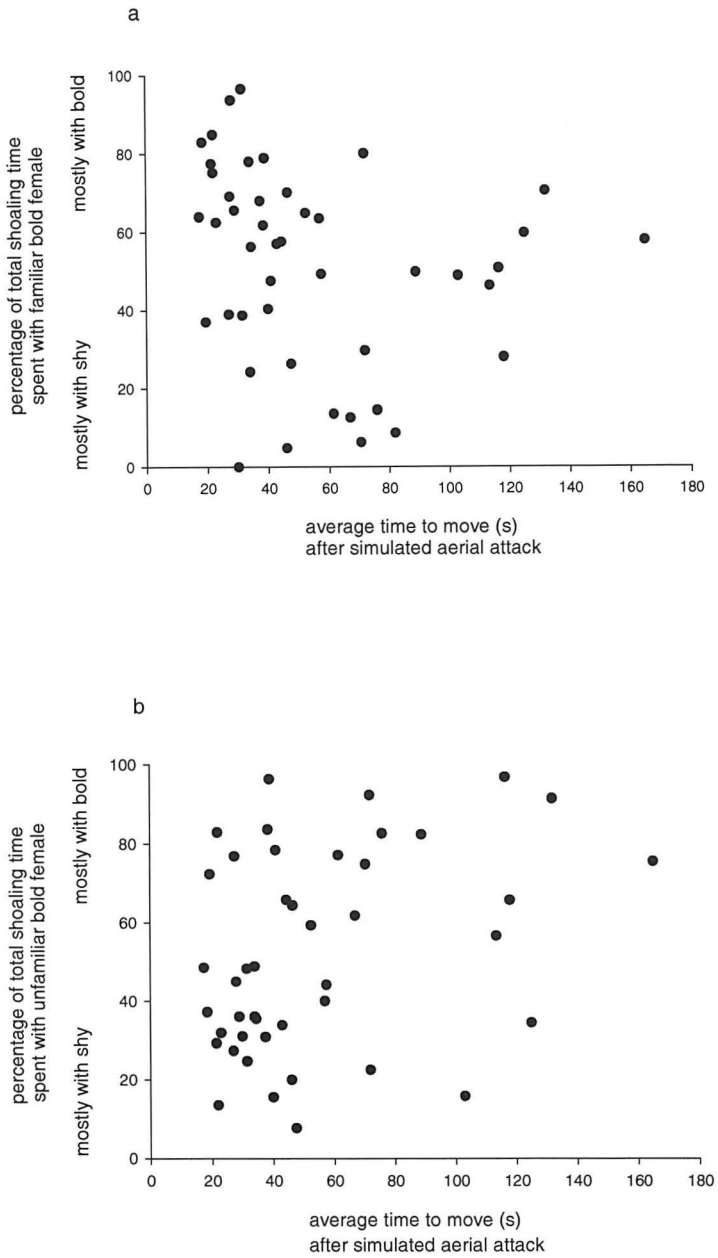

Figure 5.2: The relationship between the average amount of time taken to move (after a simulated aerial attack) and male preference for particular behavioural type of female. a) Significant negative correlation between average drop test result and familiar females and b) a trend towards a significant positive correlation between average drop test result and unfamiliar females.

The difference between the correlation coefficients describing the relationship between male behavioural phenotype and the time spent shoaling with bold or shy females from unfamiliar versus

familiar environments was also significant ($\chi^2 = 9.618$, df= 1, p=0.002, E.S.=0.468). This indicates that males significantly alter their preferences depending on the females' behavioural phenotype and whether they have recently shared a similar local environment.

5.4 Discussion

Whilst it is important to acknowledge here that the boldness measures cannot be wholly compared with other works due to the lack of repeatability, it is clear that the average score is indicating something in the male's general reaction to risk which is linked with his preferences when associating with the opposite sex. Male preferences for females were dependent on the female's phenotype and that indicated by the male's average behavioural score. This choice differed depending on the level of habitat familiarity. When stimulus females originated from an environment shared by the males, males which were, on average, bold preferred to associate with the bold females, whereas males which tended to be shy preferred to associate with shy females. In contrast, when the stimulus females were from an unfamiliar environment the relationship showed a tendency to be reversed.

Although mate-choice in guppies appears to be biased towards females, males have been shown to be far from indiscriminate in their mating behaviour. It has been suggested that preferences for females which are larger (Dosen and Montgomerie, 2004) and unfamiliar (Kelley *et al.* 1999) allow males to direct their copulations in a manner which will lead to greater fitness. Males have been shown to alter their mating strategy from energetically costly and conspicuous displays to sneaky mating in particular environmental circumstances, such as varying water velocities (Magellan and Magurran 2006); the presence of competitors (Farr 1980) and predators (Magurran and

Seghers 1990b) but also when females within their environment differ according to certain attributes such as size (Dosen and Montgomerie 2004) and receptivity (Sumner *et al.* 1994). Simcox *et al.* (2005) showed that male preference towards unfamiliar females differed according to light and predation level in another Poeciliid (*Brachyrhaphis episcopi*). Males, therefore, show highly plastic responses to levels of risk and female familiarity.

Choice between females from familiar habitats

Assortative mate choice, in terms of behavioural type, has been shown to have favourable fitness outcomes in several taxa in terms of successful fertilisation (Sinn *et al.* 2006); increased recruitment (Dingemanse *et al.* 2004) and condition of progeny (Both *et al.* 2005). It has been suggested that this is advantageous if similarity in behaviour allowed for behavioural coordination or cooperation in parental care (Schuett *et al.* 2009; Royle *et al.* 2010). However, guppies show no parental care, so mate choice will be informed by indirect genetic benefits. Male boldness has been linked to quality in terms of increased information about the predatory environment and chance of attack survival and was shown to be preferred by females (Godin and Dugatkin 1996). They suggest that females produce more viable offspring when they mate with bolder more viable males. No previous work on guppies however has examined male mate choice based on the behavioural phenotype of the females. The current results are difficult to interpret in this context. If female quality is indicated by her boldness then we would expect both male types, in the current study, to direct their attention towards one female type. In contrast however we find that the mate choice of males based on the females' behavioural phenotype differs depending on their own average behavioural phenotype. One way to tease apart the mechanisms driving these behavioural decisions would be to undertake breeding experiments to examine the reproductive success of males of different behavioural types when paired with females of different behavioural types from differing habitats.

One factor that may contribute to the observed results is the adaptive benefits associated with the phenotypic assortment of social groups. Previous work has demonstrated that bold guppies tend to be more active (Smith and Blumstein 2010) and that differences in activity levels between individuals may be an important mechanism driving group composition due to the costs of maintaining synchrony in activity (Conradt and Roper 2000). However, the authors also suggest this is a driving force for sexual segregation in animals where the sexes may have different activity patterns due to differences in body size. Habitat choices might also help to explain these results if they differ, as expected, according to the bold-shy continuum. Riskier habitats are more likely to be utilised by bold individuals (Wilson *et al.* 1993) and guppies exhibit habitat segregation (Darden and Croft 2008).

Choice between unfamiliar females

The partner choice of males when confronted with females from an unfamiliar habitat is very interesting. Males, originally from high predation, are likely to perceive a link between unfamiliarity and heightened uncertainty about the threat of predation. The most likely reason for changes in behaviour under differing conditions in this most conspicuous sex will be related to avoidance of potential predators and this might differ according to behavioural phenotype. Bold males with heightened levels of activity (Smith and Blumstein 2010) may be more conspicuous due to their increased levels of activity and may "play it safe" in a novel environment by using safer areas or courting the less active and, perhaps, less conspicuous shy females. Shy individuals, on the other hand, are known to have stronger shoaling tendencies (Ward *et al.* 2004c). In novel environments, the perception of risk may induce these males to exhibit heightened shoaling in order to gain protection but also to acquire knowledge about their new surroundings (Laland and Williams 1997). It is possible that this could result in them preferring to associate with the bold fish which are presumably more active. Males have been

shown to adaptively alter their courtship behaviour according to increased risk (Endler 1987; Magurran and Seghers 1990b) and theory suggests varying mate-choice strategies can be adaptive if the switch is from a choosy strategy to an indiscriminate one as various factors alter, such as encounter rate and survival probability (Gowaty and Hubbell 2009). Clearly further work is needed to tease apart these potential mechanisms.

Given that there is a level of heritability in certain behavioural phenotypes (Dingemanse *et al.* 2002; Sinn *et al.* 2006; Brown *et al.* 2007) the male behaviour in this study (avoidance of individuals with a similar behavioural phenotype) might indicate another layer to the mechanisms which enable individuals to avoid mating with related females. Males are thought to prefer novel females for this reason (Kelley *et al.* 1999). Once familiarity develops they might be able to avoid relatives using other cues such as odours (Le Vin *et al.* 2010).

Whatever preference a male exhibits in his choice of mate, reproduction is still expected to be directed by the females in the guppy system. Male choice could, however, disrupt the females' ability to choose, either by unwanted mating or due to female movement to riskier environments to avoid harassment, resulting in a reduced choice of males in that same habitat. Male choice can, therefore, be an important feature in guppy sexual selection.

Conclusion

Despite the lack of parental care, resource guarding or external fertilisation (which allows egg size to be clearly observed by the chooser) the guppy exhibits mate choice in both the sex which is expected to be choosy and the one which is reported as indiscriminate. I have shown in this study that variation in mate choice differs according to the male's average risk-taking behaviour, the female's type and the presence or absence of habitat familiarity between the sexes. The well documented plasticity shown by male guppies in their reproductive behaviour appears to extend to variation in choice of mate within behavioural type. It appears that the interactions between

mates differ between behavioural types and environments in a way which can be explained in terms of reaction to risk and the potential benefits of behavioural type-assorted mating. Further studies investigating the consistency of male mate-choice and the fitness consequences of mate-choice decisions would help to place this study in an evolutionary context.

6 Chapter 6

The interactions of behavioural type, network position and male presence on female growth in guppies (*Poecilia reticulata*)

Abstract

Growth can be highly variable and can differ greatly between and within fish in the same population according to various intrinsic and extrinsic influences. The consequences of reduced or increased growth rate are non-trivial in fish. Size is an important indicator of food intake and fecundity and reaching a particular size threshold is usually related to predator avoidance and the onset of sexual maturity. Differences in behavioural type are expected to be related to variation in rates of growth. The behavioural type of individuals has been shown to influence not only how they react to stimuli within their environment but also how they interact within their social environment. This study aims to quantify growth rate differences over a short time period between female guppies (*Poecilia reticulata*) that differ in boldness and to assess what impact their social surroundings has on this rate of growth. Five bold and five shy females were placed together in a semi-natural pool (x12) and allowed to interact over two weeks. Network position and growth measurements were taken (period one) and then males or small females were introduced for a week (period two) and final growth measurements were taken. In this study fish growth was not predicted by an individual's network position and bold and shy fish did not differ in growth. Fish were negatively assorted by behavioural type but not by growth. Overall, females experienced a reduction in rate of weight gain in the second period (when either male or small female stimulus fish were added). A non-significant trend indicated that females differed in the change in weight gain rate from period one to period two depending on both the females' behavioural type and the treatment group. In the male introduction treatment the shy females showed a tendency towards a greater reduction in rate of weight gain than the bold. In the female introduction group (control), however, the bold females showed a greater reduction in rate (which was biologically significant according to effect size statistics) than the shy. I discuss the possible mechanisms driving these effects.

6.1 Introduction

Intra-specific variation in many phenotypic traits has, historically, been viewed as relatively unimportant in relation to the average (Careau *et al.* 2008). However, inter-individual variation has been shown to be more than noise surrounding the "golden mean" and is of both ecological and evolutionary importance. Recent work has put forward the suggestion that there is a relationship between consistent individual behavioural variation and physiological differences in metabolic rate and growth (Stamps 2007; Careau *et al.* 2008). Consistent growth rates, variable between individuals, are expected to be coupled with stable behavioural correlations, which differ between individuals according to their growth rate and which positively contribute to both growth rate and mortality rate (Stamps 2007). According to Arendt (1997) slow growth rate is related to nutrient deficiency in the environment and fast growth rate is conditional to other environmental factors, namely avoidance of competition and/or predation by reaching particular threshold sizes. Risk-prone (bold) behaviour enables an individual to access greater food resources for faster growth by trading-off current predator avoidance with future gains (becoming better competitors or less easily handled prey items). In conditions with reduced nutrition shy individuals which are expected to be slow growing can reduce their activity without major loss of condition. Increased growth rate has been linked with increased standard metabolic rate, reduced time to maturity and social rank in Atlantic salmon (*Salmo salar*) (Metcalfe & Thorpe 1992). A reduction in growth rate in these fish resulted in delayed migration for an entire year and according to Metcalfe and Thorpe (1992) is determined not only by the physical environment but also by the social environment. Early emerging individuals were able to establish dominance over later emerging ones at feeding sites via a prior residence effect. Huntingford *et al.* (1990) suggested that the larger size of dominant salmon was likely to be due to dominant fish

growing larger rather than larger fish becoming dominant. Although, the link between dominance in fish and the bold-shy behavioural continuum is not well established, it appears that particular consistent behaviours can impact on an individual's growth and on the growth of others. The composition and structure of the social environment will be expected to influence individuals within and these effects may operate differentially depending on the behavioural phenotype of the individual.

Group membership is likely to affect growth in several ways. Individuals can spend more time foraging if they spend less time scanning for predators in larger groups (review in Bednekoff and Lima 1998) and have been shown to find food faster when part of a foraging group (Pitcher 1982, Ranta and Lindström 1990). However, within groups there will be increased competition for food (Ranta *et al.* 1993). The consequences of group membership can, therefore, be dynamic and an individual must weigh up the options of joining, staying with and leaving a group regularly (Pitcher *et al.* 1983; Ranta *et al.* 1993). The structure of the social network within the population is built from and will inform these decisions.

Many groups have been found to consist of individuals which appear to be phenotypically similar, such as in body length (Ranta and Lindström 1990; Hoare *et al.* 2000) and parasitic infection (Krause *et al.* 1999; Hoare *et al.* 2000). This assortativeness is also seen across the wider social network in wild guppies (*Poecilia reticulata*) with fish assorted by body length (Croft *et al.* 2005) and females forming stable pairs (Croft *et al.* 2004b). The benefits of such positive assortment may come from a reduction of competition in foraging (Ranta *et al.* 1993) or an increased cooperative ability (Axelrod and Hamilton 1981). Both competition and cooperation might be expected to influence nutritional intake and energy consumption and will, therefore, impact on growth. Individuals are expected to act according to their internal motivations but within the context of their social circumstances. The resulting trade-offs are likely to affect growth differentially for individuals at different positions along the

behavioural type continuum, as bold and shy individuals differ in their social interactions (Magnhagen and Staffan 2005; Frost *et al.* 2007; Pike *et al.* 2008).

Male harassment has been shown to have many important negative affects on females including energetic costs (Clutton-Brock and Langley 1997); increased injury (Mühlhaüser and Blanckenhorn 2002) and predation (Arnqvist 1989) and decreased mate-choice (Magurran and Seghers 1994b). Male harassment in the guppy, especially, is thought to increase energetic costs due to oxygen consumption in the rare heterospecific female Goodeid (*Skiffia bilineata*) towards which they direct 25% of their courtship activities (Valero *et al.* 2008). Males in high predation environments spend more time in courtship, reducing the time females are able to forage (Magurran and Seghers 1994b) and perhaps increasing their conspicuousness to predators when in the presence of a courting male (Pocklington and Dill 1995). The presence of males in a social group has been shown to disrupt social behaviour in females. Darden *et al.* (2009) observed that female guppies formed less closely connected social ties and were less able to develop social recognition when undergoing male harassment. The consequences to this social disruption are likely to include reduced foraging success (Pilastro *et al.* 2003) and increased aggression (Utne-Palm and Hart 2000) both of which can impact on growth. Social environmental effects on particular male behaviour, such as courtship tactics is also expected to impact on females. Males have been shown to switch between females less often, the wider the variation in the level of orange colouration of males in the surrounding social environment (Jirotkul, 2000). Male courtship has also been shown to alter from displays to sneaky mating with a male biased OSR (Jirotkul 1999). The avoidance of arduous male tactics will require increased energy expenditure (Jormalainen *et al.* 2001) by the female, which will further reduce growth.

The aim of this study was two-fold. Firstly, the impact of behavioural type on growth was tested within the context of a social environment and the relationship between an individual's social

network position and growth was explored. Secondly, I measured the influence of male presence on female growth within a social context and according to behavioural type. 12 social networks were studied, each within a semi-natural pond containing ten adult female guppies (five bold and five shy females, quantified in terms of their reaction to a simulated model predator). Network measures were taken on days three and six. On day 12 all females were re-measured before either males (treatment) or small females (control) were introduced with them into their original pools and all were left for eight days. Growth measures were taken using body length and weight gain over period one (14 days prior to treatment) and period two (eight days treatment or control).

Bold and shy females are expected to differ in growth rate and this should be apparent in their initial 14 days together. Based on recent theoretical predictions, which are based on tradeoffs between growth-mortality (Stamps *et al.* 2007) and/or life-history (Wolf *et al.* 2007), bold females are expected to show a faster growth rate in comparison to shy females. Due to the variously reported negative impact of male harassment on females, it is expected that the presence of males will slow the growth rate of females across both phenotypic groups, but that the level of reduction in rate will differ between bold and shy females. I hypothesise that shy females will show the greatest reduction in growth rates either due to a reduction in activity (due to their reaction towards the male presence), including feeding, in an attempt to avoid male attention or the general increase in activity reducing feeding and shoaling activities affecting the shy female the most. The presence of small females in the control will increase competition for food and this will slow growth rate but not as much as the male treatment and no differences are expected between the female behavioural phenotype groups.

6.2 Methods

The study was carried out using wild caught adult male and female guppies (body length mean±s.d.: large female - 26.57±3.3mm; small female – 21.49±2.1mm; male - 19.49±2.0 mm) caught in April and May 2009 from the lower reaches (high predation area) of the Aripo River in the Northern Mountain Range, Trinidad (N10°40 W61°14′). Guppies from this area of the Aripo experience high predation from major guppy predators such as *Crenicichla frenata*, and *Hoplias* spp (Magurran 2005). Large female guppies were caught, initially, using two-metre seine nets from pools spaced over a distance of 80m. They were brought into the laboratory and subdivided between three large aquaria (90cm x 30cm x 25cm water depth) for a settling period of 36 hours with 12 L: 12 D cycle illumination and temperature of 24°C. The males and small females were collected approximately two weeks after the large females from the same location and housed in a similar manner.

I quantified each individual's behavioural phenotype on day one by recording its response to a simulated aerial predation strike. Previous chapters in this thesis have shown repeatable variation in this behaviour within a guppy population. Fish were tested in an opaque container (35cm; water depth 10cm) after all individuals had been given an hour to feed to avoid state dependent variation in behaviour. A small stimulus shoal, which had been previously acclimatised to the test conditions, was placed, enclosed to one side of the test area, as a method of reducing stress in the focal individual. After the focal individual was allowed to swim freely around the test area for a 5 minute settling period, a weight (attached to a length of fine twine and released remotely) was dropped from a height (80cm) directly above the tank centre. On hitting the water all test fish froze and I recorded the time taken for the test fish to resume movement as a measure of boldness.

Period one

The large females were tested in three batches of 65 fish. Each batch was used to populate four social networks with the assignment of fish (N=10) to each network being dependent on their behavioural score. Following testing (e.g. in batch one), all fish were ranked according to their behavioural score. Only the 20 boldest and 20 shyest were then given individual identity marks (see below) according to their behavioural score and assigned to a network. The fastest four fish to move were assigned id 1 and placed randomly in networks 1-4; the second four id 2 and so on until id 10 (mean body length per network ± s.d. = 26.57±3.078mm). Each of the 12 social groups was housed individually in an outdoor pool (180 cm diameter, 12 cm water depth) which had natural substrate (small, algae covered stones) collected from the river of origin. Marking was carried out using visual implant elastomer (see Croft *et al.* 2003c for details) which has been shown to have no affect on shoal choice behaviour (Croft *et al.* 2004b). The fish were left to acclimatize for 48 hours in their pools. Despite attempts to avoid bias by choosing bold and shy females that did not differ in body length both overall (independent samples t test: t= -1.492, d.f. 118, p=0.138) and within networks, there was a non-significant trend towards a difference between bold and shy individuals in initial body weight (independent samples t-test: t = -2.452, df = 118, p=0.016 (corrected 0.005)), with shy fish being the heavier (body weight: mean±s.e. - bold =0.204±0.01; shy =0.231±0.01). However, this difference between bold and shy females was not apparent within networks and there were no significant differences between bold and shy fish within each network immediately prior to the treatment in either weight (fisher's combined test $\chi^2_{0.05\ \{24\}}$=36.42: Z= 24.37, p >0.05) or length (Z= 23.95, p >0.05) producing a balanced design.

Association patterns were recorded on day three and day six (and day 12 but algae blooms prevented data acquisition). Shoal composition was quantified by an observer positioned at the pool side who took still photographs using a Nikon D40x digital camera. For the

purpose of sampling, the pool was subdivided into quadrants ensuring the observer was never more than 90cm from sampled fish and could take clear photographs of marked individuals. The majority of observations occurred within the wider arc of the quarter. For those associating close to the furthest point of the quarter (towards the pond centre) the angle of observation was accounted for by eye. Observations were made for 15 minutes in each quarter with 10 minutes acclimation prior to each observation period. Individuals were only scored once in every minute sampling period and in the largest group, if they were observed in more than one. This was to ensure all individuals which were seen, during this sampling period, were scored.

On day 12 all females were collected from the pool, using a large dip net. The behavioural phenotype of each individual was re-quantified using their reaction to a simulated aerial attack (see methods described above). Following testing the fish were anaesthetised and measured for length and weight and allowed to recover overnight together with their social group members in tanks (30x20x20) in the laboratory. The next morning they were released back into their semi natural ponds (day 13).

Period two

On day 14 either four small females (length similar to that of adult males) or four males were added to each of the four networks. These individuals had similarly been measured, tested for behavioural type, marked accordingly and introduced to networks in an equal ratio of bold to shy ensuring equality of behavioural types within each pool. Fish were left together in these networks for eight days. Networks photos were taken on day 15 and day 19 but, as with day 12, algae clouding prevented appropriate measures being taken from them. On day 20 all fish were collected, measured for length and weight and released into a large artificial pond on the University of the West Indes' St. Augustine, Trinidad. Losses occurred in the large female networks due to illness or potential predation by birds. 6 large females

were lost over the testing period in the male introduction treatment and 6 in the female introduction networks.

Statistical analysis

Spearman's correlations were used to quantify the repeatability of the boldness scores on day 1 and day 12. Independent samples T-tests were used to confirm there were no significant weight or length differences between behavioural types within each network at the start of the experiment. P-values were pooled for networks within treatment to test for significance. Independent samples T-tests were also used to test for differences between female behavioural types in rate of weight gain between treatments and over all individuals. I compared the change in length in the same way but using Mann-Whitney U, as these data were non-normally distributed.

Social interactions were identified by defining associations between fish which were observed within four body lengths of each other (similar to Pitcher *et al.* 1983) using photographs. From this information association matrices and network diagrams (figure 6.1) could be compiled for each network. The depth of the pond did not disrupt the ability to identify individual distances as individuals at the surface and the bottom were still within the inter-individual interaction distances mentioned above.

Standard network measures were calculated using the Newman weighted association index (Newman 2001 see chapter 2). I calculated individual female network positional measures and average structural measures for each of the entire networks. Using the common network measures used in chapters 2 and 3, I was able to gain an evaluation of an individual's connectivity using the weighted path length (PL); local neighbourhood connectivity using the weighted clustering coefficient (CC), comprehensiveness of interactions using the un-weighted degree (UWD), the intensity of overall interactions weighted degree (WD) and the mean association strength (AS).

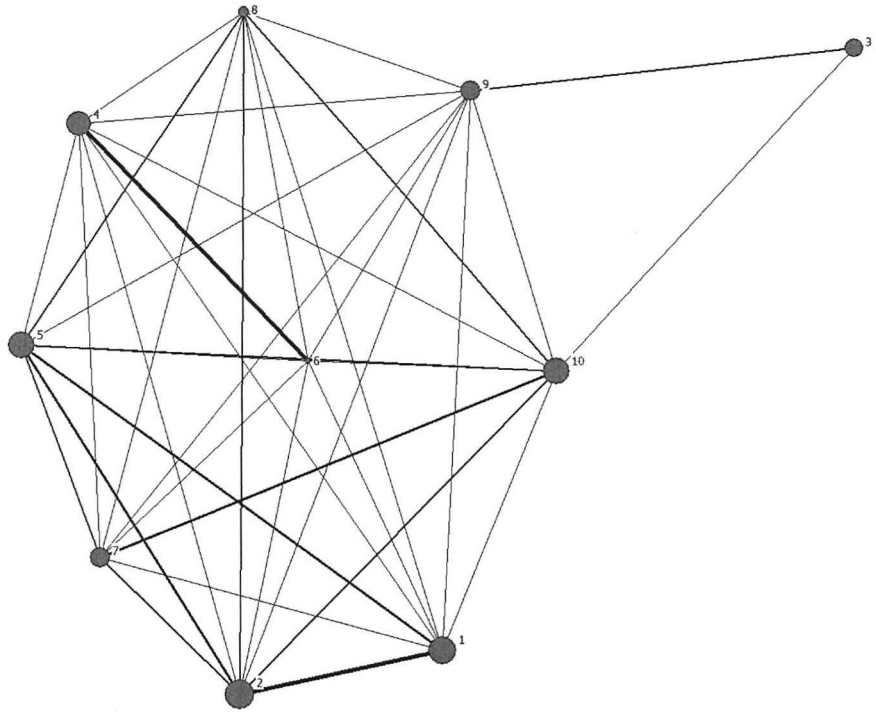

Figure 6.1: sociogram of a single network on day 6 with spring embedding. The circles (nodes) are individual females whose increased rate of weight gain in period one is portrayed here by an increase in node size. The thicker the lines (edges) the greater the strength of associations (tie strength) between pairs. All associations were included.

The unweighted degree score was a binary measure, scoring any pair of individuals which were never seen together as zero, those seen associating together one or more times were given a score of one. The betweenness measure was normalised centrality flow which uses weighted values rather than using just the shortest binary path between pairs (Freeman *et al.* 1991). Thus providing a quantification of the level of influence each individual might have within the network.

To determine the relationship between an individual's boldness score, weight gain and length increases with standard network measures I used a regression analysis in UCINET (Borgatti *et al.* 2002; Hanneman and Riddle 2005). This procedure enables regression analysis to be used on non-independent data such as network data, by using comparisons to randomly generate networks

using the same data. The regression analysis in UCINET does this by shuffling the node labels creating a random sorting with which the original data could be compared and is thus able to account for non-independence. The small numbers of individuals used in each network is this study were unlikely to have produced wide-ranging group-size differences and so the lack of a facility to account for group-size distribution was not problematic here. The various network positions on day six for individuals within each network were regressed with their individual initial drop test scores and rate of size increase over period one. A Fisher's combined test (Sokal and Rohlf 1995) was used to assess the significance of regression coefficients for the networks overall. Homophily of behavioural phenotype was assessed using the Moran test in UCINET (Hanneman and Riddle, 2005). This gives a measure for the social proximity of individuals in terms of their similarity (or dissimilarity) in behavioural scores and is compared to randomly assorted networks. A Fisher's combined test was, again, used to obtain the significance overall. This provided the level of assortment by behavioural phenotype in each social network for both sampling days. The same was done for rate of weight gain and body length increases over period one with day six networks.

Finally a univariate ANOVA with backwards elimination of non-significant terms was used to measure any differences in rate of weight gain and length increases in females due to the different treatments in period two. The comparison between the rate of weight gain in period one to that in period two was measured using a repeated measures GLM. Where significant or marginal results occur according to the null hypothesis significance test, effect sizes (E.S.) and confidence intervals (CI) are provided ensuring relevant discussion of the biological significance of the results (Stoehr, 1999). CIs for the correlations between drop test scores were calculated according to Altman and Gardner (1988) and repeated measures effect size results were calculated using Dunlap's formula (Dunlap et al (1996). E.S. for ANOVAs were calculated according to adaptations of Cohen's *d* test (Cortina and Nouri (2000), and CIs according to (Nakagawa and

Cuthill 2007). All analysis was carried out using SPSS (version 14 2005). P-values were corrected when appropriate for multiple testing using Benjamini and Hochberg's (1995) corrections.

6.3 Results

Behavioural responses to the simulated aerial predation attack where repeatable between day 0 and day 12 ($r= 0.442$, $N=108$, $p<0.001$, CI: 0.276 to 0.582), with a moderate effect size and narrowly spaced confidence intervals which did not cross zero.

Bold and shy females did not differ in the rate of weight gain in the first 12 days (independent samples t-test: $t= 1.105$, $df = 108$, $p=0.271$) nor did they differ in rate of body length increases during this period (Mann-Whitney U: $Z= -0.027$, $N= 110$, $p=0.979$).

<u>Relationship between growth, behaviour and network positioning</u>

None of the individual attribute measures (weight gain, increases in length and behavioural type) could be predicted by network positions on day 6 (table 6.1).

Females were significantly negatively assorted according to behavioural type across both sampling days (table 6.2). On day 6 the females did not assort significantly according to either weight gain or increase in length in period one (table 6.2).

Table 6.1: regressions of network position on initial drop test score (behavioural type), weight and length increases on day 6 for all networks with significance from comparisons with 1,000 random permutations. Overall significance acquired using Fisher's combined. Network 1 data missing

	WPL			WCC			UWD			WD			AS			nCF		
nwk	**type**	**weight gain**	**length incr**	**type**	**weight gain**	**length incr**	**type**	**weight gain**	**length incr**	**type**	**weight gain**	**length incr**	**type**	**weight gain**	**length incr**	**type**	**weight gain**	**length incr**
2 R^2	0.000	0.000	0.000	0.566	0.007	0.010	0.000	0.000	0.000	0.558	0.029	0.025	0.553	0.030	0.025	0.102	0.005	0.019
p	1.000	1.000	1.000	0.010	0.807	0.797	1.000	1.000	1.000	0.010	0.643	0.671	0.016	0.634	0.671	0.376	0.826	0.693
3 R^2	0.000	0.174	0.000	0.105	0.259	0.028	0.000	0.006	0.061	0.167	0.056	0.028	0.166	0185	0.079	0.060	0.002	0.006
p	1.000	0.233	0.962	0.369	0.092	0.454	1.000	0.823	0.531	0.215	0.477	0.720	0.247	0.192	0.510	0.494	0.895	0.791
4 R^2	0.057	0.117	0.124	0.118	0.069	0.125	0.057	0.117	0.124	0.018	0.147	0.156	0.018	0.135	0.091	0.001	0.127	0.108
p	0.547	0.331	0.297	0.307	0.485	0.333	0.519	0.307	0.329	0.695	0.276	0.258	0.705	0.264	0.413	0.929	0.317	0.352
5 R^2	0.021	0.342	0.037	0.004	0.313	0.066	0.023	0.342	0.037	0.042	0.187	0.004	0.052	0188	0.004	0.007	0.209	0.042
p	0.719	0.200	0.710	0.863	0.088	0.357	0.694	0.189	0.704	0.544	0.222	0.851	0.507	0.240	0.843	0.832	0.187	0.548
6 R^2	0.087	0.006	0.103	0.089	0.020	0.065	0.087	0.006	0.103	0.133	0.092	0.030	0.177	0.153	0.028	0.154	0.046	0.000
p	0.422	0.833	0.393	0.400	0.683	0.499	0.433	0.847	0.392	0.268	0.382	0.634	0.205	0.241	0.649	0.281	0.543	0.986
7 R^2	0.084	0.085	0.002	0.026	0.260	0.028	0.082	0.087	0.002	0.071	0.235	0.009	0.003	0.155	0.004	0.187	0.041	0.008
p	0.377	0.462	0.911	0.670	0.111	0.637	0.434	0.462	0.906	0.459	0.153	0.814	0.873	0.279	0.865	0.218	0.566	0.794
8 R^2	0.000	0.008	0.027	0.005	0.031	0.080	0.000	0.008	0.027	0.015	0.109	0.222	0.015	0.138	0.276	0.204	0.080	0.172
p	1.000	0.826	0.674	0.845	0.650	0.445	1.000	0.818	0.659	0.731	0.327	0.142	0.719	0.284	0.127	0.196	0.433	0.256
9 R^2	0.107	0.023	0.070	0.156	0.032	0.000	0.014	0.024	0.070	0.085	0.291	0.366	0.025	0.288	0.297	0.529	0.033	0.029
p	0.314	0.688	0.531	0.277	0.650	0.963	0.724	0.701	0.511	0.423	0.107	0.075	0.676	0.122	0.114	0.014	0.649	0.617
10 R^2	0.000	0.066	0.037	0.000	0.003	0.001	0.000	0.066	0.037	0.000	0.095	0.114	0.000	0.137	0.151	0.245	0.024	0.060
p	1.000	0.451	0.550	0.982	0.870	0.932	1.000	0.462	0.534	0.964	0.380	0.355	0.971	0.323	0.261	0.141	0.671	0.489
11 R^2	0.071	0.043	0.164	0.058	0.011	0.119	0.216	0.043	0.164	0.325	0.257	0.258	0.270	0.256	0.257	0.120	0.151	0.318
p	0.436	0.636	0.193	0.514	0.747	0.302	0.170	0.581	0.180	0.063	0.134	0.141	0.107	0.133	0.121	0.287	0.276	0.119
12 R^2	0.225	0.100	0.079	0.049	0.015	0.008	0.225	0.100	0.079	0.004	0.019	0.024	0.000	0.050	0.056	0.003	0.164	0.195
p	0.165	0.382	0.415	0.538	0.733	0.809	0.135	0.377	0.433	0.866	0.702	0.678	0.976	0.552	0.512	0.895	0.233	0.202
Fisher's combined p-value ($\chi^2_{0.05\{24\}}$ =36.42)	**Z= 13.12**	**Z= 15.81**	**Z= 13.54**	**Z= 23.76**	**Z= 19.87**	**Z= 13.24**	**Z= 13.58**	**Z= 13.65**	**Z= 14.80**	**Z= 28.20**	**Z= 27.00**	**Z= 21.66**	**Z= 24.25**	**Z= 29.34**	**Z= 21.97**	**Z= 27.90**	**Z= 17.44**	**Z= 17.56**

Table 6.2: Moran test (UCINET) showing assortment in each network according to behavioural type on day 3 and behavioural type and growth on day 6 (network 1 data on day 6 missing)

Ntwk	day three		day six					
	assortment by behavioural type		**assortment by behavioural type**		**assortment by rate of weight gain in period one**		**assortment by rate of increase in length in period one**	
	r	**p**	**r**	**p**	**r**	**p**	**r**	**p**
1	-0.028,	0.168						
2	-0.267,	0.012	-0.205,	0.070	-0.154	0.310	-0.146,	0.282
3	-0.200,	0.122	-0.574,	0.046	-0.186,	0.388	-0.091,	0.412
4	-0.464,	0.040	-0.073,	0.464	-0.382,	0.048	-0.118,	0.441
5	-0.135,	0.439	-0.216,	0.147	-0.024,	0.196	-0.104,	0.573
6	-0.150,	0.337	-0.038,	0.210	-0.179,	0.196	-0.020,	0.201
7	0.040,	0.148	-0.123,	0.462	-0.168,	0.279	-0.145,	0.404
8	-0.062,	0.323	-0.014,	0.167	-0.109,	0.507	-0.190,	0.213
9	-0.298,	0.109	-0.038,	0.316	-0.038,	0.345	-0.206,	0.338
10	-0.109,	0.526	-0.159,	0.337	-0.114,	0.509	0.117,	0.024
11	-0.016,	0.264	0.001,	0.157	-0.187,	0.243	-0.056,	0.317
12	-0.318,	0.013	-0.004,	0.170	0.027,	0.136	-0.020,	0.169
Fisher's combined p-test	**Z= 50.03*** <($\chi^2_{0.005\{24\}}$ =45.56)		**Z= 36.82*** <($\chi^2_{0.025\{24\}}$ =39.36)		**Z= 31.04** >($\chi^2_{0.05\{24\}}$ =36.42)		**Z= 30.65** >($\chi^2_{0.05\{24\}}$ =36.42)	

* - significant after Benjamini and Hochberg (1995) multiple test corrections

Differences between treatments in growth of females

The type of treatment (i.e. the introduction of males or small females) had no significant affect on the rate of weight gain in females or in the interaction with female behavioural type (mixed within-between subjects ANOVA with backwards elimination of non-significant terms: treatment*behavioural type – $F_{1,102}$ = 1.596, p=0.209; behavioural type – $F_{1,103}$ =0.004, p=0.952; treatment – $F_{1,104}$= 0.184, p=0.668) over the treatment period (period 2). Similarly, no effects were seen in the rate of increase in body length in period 2 (treatment*behavioural type – $F_{1,102}$ = 2.978, p=0.087, E.S.= 0.246, CIs -0.215 to 0.707); behavioural type – $F_{1,104}$ =0.110, p=0.741; treatment – $F_{1,103}$= 0.093, p=0.761).

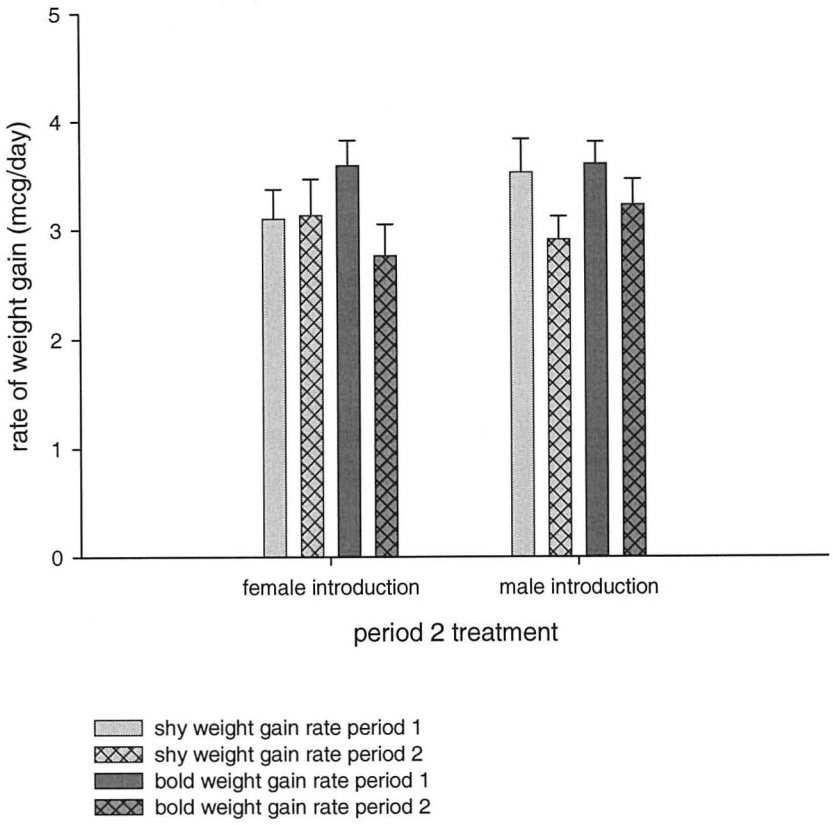

Figure 6.2: Mean±s.e. differences in rate of weight gain over period 1 (large females only days 1-12) and period 2 (treatment vs control days 14-23) in bold and shy females undergoing two different treatment regimes. The bold fish showed the greatest change in the control treatment (mean difference ± s.e.: bold = 0.799 ± 0.34; shy = -0.015 ± 0.32) and the shy female showed the greatest change in the male introduced treatment (bold = 0.351 ± 0.28; shy = 0.663 ± 0.33).

However, a non-significant trend towards a difference ($F_{(1,105)}$ = 7.759, p= 0.006 (corrected 0.005)) was seen between the rate of weight gain in period 2 (treatment days 13-23) compared to that during period 1 (pre-treatment days 1-12) overall (figure 6.2). This showed a small but biologically significant result using effect size

statistics (E.S.= 0.321, CIs 0.088 to 0.554). A non-significant trend in change in rate of weight gain ($F_{(1,102)} = 3.144$, $p= 0.079$), apparent in the interaction between treatment and behavioural phenotype, can be understood by way of an exploration of the within group effect size. Shy females showed the greatest reduction in the male introduction treatment (Cohen's d, 95% CI: shy females = 0.456, -0.049 to 0.960; bold females = 0.288, -0.201 to 0.778). However, this conclusion is supported by only a medium effects strength and confidence intervals which cross zero, suggesting the "true" value could also show no difference in change to rate of weight gain. In the control test it was the bold females which showed a significant reduction in weight gain (bold females = 0.574, 0.031 to 1.117; shy females = -0.009, -0.426 to 0.408). (figure 6.2). This result is supported by the effect strength and positive confidence intervals for the bold females. No such difference occurred in the rate of change in length increases over these periods.

6.4 Discussion

Growth was not predicted by an individual's network position, nor did females show assortment by growth. There was no difference in growth between individuals of different behavioural types during the first observation period. Similar to the adult female networks studied in chapter 3, all networks also showed dissassortative associations according to behavioural type. All females experienced a reduction in rate of weight gain in the second period compared to the first and this differed according to both female behavioural type and treatment group. Bold females reduced their weight gain most in the control (small female introduction) group than the shy and shy females reduced their weight gain more than bold in the male introduction treatment. The results suggest that growth is affected mostly by the density of females but also by the presence of males and bold and shy

females will react differently towards these different conditions in their social environment.

Growth in both weight and length can be highly plastic in many taxa but it is particularly so in fish, which exhibit indeterminate growth. The consequences of reduced growth can be extremely detrimental and studies have shown that a change from "preferred" growth rate within an individual can affect its survival (Johnsson and Bohlin 2006) and its migration (Metcalfe and Thorpe 1992) including reproduction in the guppy (Auer *et al.* 2010). Growth rate within a population is highly variable (Stamps 2007) and within individuals is dependent on fluctuating environmental conditions such as temperature, density and food supply (Weatherley and Gill 1987). Growth and the consequences of reduced growth are likely to differ according to behavioural type, as indicated by current thoughts on the links between behavioural type with the growth mortality trade-off and life history (Stamps 2007; Wolf 2007).

Growth, behavioural type and network position

Growth rate differences existed between the behavioural types but only according to the type of treatment. Although these were reported over a small time period, the relationship between behavioural strategy and individual growth might still be expected to produce an overall difference between the behavioural types irrespective of treatment regime. In the current study I did not find a relationship between network position and growth rates. This result is somewhat surprising, given, for example, that the level of competition an individual will experience is likely to be dependent on their social network interactions, which differ according to behavioural type (chapter 3). The social networks used in the current investigation were small (10 individuals). It is, therefore, possible that under more natural conditions (i.e. in large social networks) there is more opportunity for individuals to differ in their social network position and this may have growth consequences.

I found no relationship between behavioural type of an individual and their social network metrics, contrary to findings by Croft *et al.* (2009) who found that shy guppies in a wild Trinidadian network had more network connections, which were stronger than bold fish. Pike *et al.* (2008) also found shy fish had greater association strengths than bold in their study on mixed sex sticklebacks (*Gasterosteus aculeatus*). Similar to the findings in chapter 3, however, bold females were more closely associated with shy females and vice versa on both day 3 and day 6. This assortment is likely to be due to active partner choice (see discussion in chapter 3). These findings support previous observations in the wild where guppies were observed to negatively associate based on behavioural type (boldness). However, this was only apparent between weak associations (Croft *et al.* 2009). This pattern of assortment may be driven by both foraging and predator avoidance benefits for shy and bold fish, respectively. For example in a study on female guppies by Dyer *et al.* (2009) the authors found that shoals composed of a mixed behavioural phenotype were more successful at finding and foraging on a novel food source in comparison to single type groups (i.e. all bold or all shy). As suggested in chapter 3, evidence is building to indicate that this pattern is likely to be driven by the shoaling partner choice of shy females. In support of this, in chapter 4 partner choices only existed in shy females, who tended to choose bold rather than shy individuals.

The effect of treatment on growth

Overall, females reduced their growth in period two in comparison to period one. This is likely to be due to the increase in density resulting in increased competition for food. However, when either males or small females were added to the social groups, bold and shy females appeared to respond differently. Bold females showed a biologically significant reduction in rate of weight gain in the small female treatment group whereas, in contrast, it was the shy females which

appeared to show the greatest reduction in rate in the male treatment group.

For the bold females one possible mechanism that may drive this effect is that the introduction of small females produces increased competition in a manner that affects only the bold females. Such a mechanism would only occur if the small females actively preferred to associate with the bolder females over the shy female, if they accessed food in the same way as the bold females, or if the increase in overall competition together with the potential scrounging behaviour of the shy females (as suggested in Dyer *et al.* 2009) had a particular impact on the bold females. Further work examining this hypothesis would be rewarding. A control where no individuals were added would have allowed for more robust conclusion to be made in this study. The potential effect of increased density has been shown to have an initial, temporary affect on weight gain in fish which experienced a sudden change in density (Sanchez *et al.* 2010). Whilst increased density affects on female growth rate is clearly illustrated in a recent study by Smith and Sargent (2006) who found that increasing the number females in a population reduced growth rates in females more than increasing the density of males.

In contrast to the female introduction groups, in the male introduction groups the shy females showed a tendency towards a reduced rate of weight gain. The differential change in weight gain may be a consequence of the differential costs of male harassment to bold and shy females. One mechanism that may contribute to this is that, in the presence of males, shy females have to alter their activity levels to avoid male harassment. This would impact on growth rates if they increased activity to move away from males or if they reduced activity to hide from them, reducing their ability to feed. This, incidentally, would release the bold females from any potential scrounging activity by the shy, mentioned previously. Male harassment may also impact on bold and shy females' social relationships differently, which may have consequences for growth rates. Shy females have been found to have more widespread and

stronger associations within a wild guppy social network (Croft *et al.* 2009), similarly in a laboratory stickleback population (Pike *et al.* 2008). It is these strong, widespread associations which are disrupted in Darden *et al.*'s (2009) work on guppy females which undergo male harassment. In light of these studies the suggestion that shy female social associations are most at risk from harassment by males is a natural assumption and is a certainly a route for further investigation.

Conclusion

This study shows the social environment has notable effects on individual growth and individuals which differ in their propensity to take risks are affected differentially. The expected differences in growth between the behavioural types, in line with recent theoretical papers, were only seen after the introduction of other individuals and did not favour bold fish in both treatments. Clearly, the effects of the social environment need to be studied at the individual level to gain a fuller understanding of the various interactions taking place. This will be a challenge as many factors would need to be considered, within a sample consisting of non-independent data points.

Further work to gain more detailed information regarding growth rates would benefit from measuring growth rates repeatedly in the same individuals (Weatherley and Gill 1987) rather than over a single observation period as in the current study. Studying the developmental growth would provide information regarding the speed to maturity of the different behavioural types. This could be tested under various social conditions such as same-type groups or various densities to understand how different social environment can impact on growth and whether the two types differ in their partitioning of growth.

7 Discussion

The aim of this thesis was to quantify the importance of individual behavioural phenotype on guppy (*Poecilia reticulata*) social interactions. This discussion will summarise my findings in light of the current literature and suggest possible directions for future research. I investigated the behavioural phenotype assortment within a social system using replicated female social networks. Individuals were measured for their behavioural phenotype and treated to either a simulated predation event or a control. From this I was able to assess network change due to time or predation. I also gained measures of assortment from smaller female social networks and to gain an understanding of how network structure and male harassment can affect fitness parameters in females I measured length and weight gain over time and after the introduction of males or of a control. The decisions individuals make will be underpinned by their behavioural phenotype. In terms of their social interactions both their own and their partner's phenotype is likely to inform their choices. I measured how behavioural phenotype can affect choice by using binary choice tests where the behavioural phenotype of both the chooser and chosen are known. I discuss how this might affect the wider social network structure.

7.1 Methodological comparisons

The use of Social Network Analysis provides an ability to interpret the social implications of a multitude of biologically important processes, such as the spread of disease (Watts and Strogatz 1998; Cross *et al.* 2004) or the resilience to loss (Flack *et al.* 2006; Williams and Lusseau 2006). However, for many animal networks, the manner of sampling must be customised, as access to social interactions might be compromised by time constraints and/or observational difficulties.

The choice of sampling method, appropriate to both the study subject and question is, therefore, vital. In many studies of animal social networks interactions are assumed by way of group membership and associations amongst group members are measured using the Gambit of the Group (Whitehead and Duffault 1999). Various indices can be utilised to rectify particular sampling biases (Cairns and Schwager 1987) and in some wild networks randomisation techniques (which can conserve variation in group sizes, amongst other things) have been used to access biologically significant results (Christal & Whitehead 2001). In small, replicated networks, such as are used in this thesis and in several recent studies (Morrell *et al.* 2008; Pike *et al.* 2008; Thomas *et al.* 2008), this technique is often not applied and frequently no consideration is given to the potential effect of group size on the strength of social relationships between individuals within groups. The aim of Chapter 2 of this thesis is to quantify the extent to which group-based methods can be used to describe fine-scale association patterns, with a view to establishing the importance of controlling for group-size variation. Newman (2001) suggested that authors who collaborated on scientific papers with many co-authors are not as likely to know one another as those in a collaboration of two. This reasoning can be related to many other networks where the size of the grouping will affect the ability for individuals to be closely associated. Comparisons were, therefore, made of various group-based indices, including Newman's group-size correction, in relation to the Nearest Neighbour methodology which provides fine-scale social information.

I found that correcting for group size produced weighted association matrices which were highly correlated with those depicting fine-scale information produced by NN. Although, this method did not produce similarly fine-scale results for the standard network measures, it remains relevant for many questions involving network assortment, such as the spread of cooperation, information or disease (Newman 2002). Utilising a measure which can produce fine-scale results from group-based sampling methods can produce

complex network data set without losing the global features of the social setting.

As well as highlighting the importance of considering the method of defining associations, the results of this chapter have helped to direct the choices made in the analysis of network data presented in this thesis.

Suggestions for further work

A welcome addition to the tools used in social network analysis is that being developed by Franks et al (2009), which will assist researchers in choosing the appropriate method of sampling for their experimental population. The ability to design sets of networks which differ structurally would also help to test GAc in its ability to provide fine-scale representations of social structure for various networks, as well as highlight any limitations. In particular its ability when used on large data sets expected to be common with the advancement of novel animal recording technologies (Krause *et al.* 2010). The speed with which these technologies are expected to be taken up increases the importance of understanding the behaviour of indices on various data sets.

7.2 ***Assortment in Social networks***

Common structures can be found in many social networks, including in animal groups. One such pattern is that of small clusters of closely associated individuals which have a few long distance connections between them. Entitled the Small World phenomenon, this pattern is conducive to the spread of information (Latora and Marchiori 2001) and disease (Watts and Strogatz 1998) but the more connections between the clusters the less likely cooperation can emerge (Watts and Strogatz 1998). Another common pattern, in social networks especially, is that of positive degree assortment (Newman 2002); those individuals which have many direct associations tend to associate with those which also have many direct associations. This pattern forms

groups of highly connected individuals, with those sparsely connected on the network fringes; a core-periphery pattern. The resulting network structure has the ability to harbour disease as well as manage the loss of highly connected individuals (Newman 2002). However, Rong and Wu (2009) suggest this pattern does not encourage the persistence of co-operators in scale-free networks.

Similar to Croft *et al.*'s study (2005) on a mixed sex population of wild guppies, I also found positive degree assortment. This was unlikely to have been a pattern found due to a spatial preference based on scent (Ward *et al.* 2007), or site preference (Croft *et al.* 2003c) as the experimental environment was compact and relatively sparse. Neither was this pattern likely to be due to the passive assortment of those with increased shoaling tendencies (which we would expect to lead to positive assortment). The tendency to shoal has been shown to correlate with the bold-shy continuum in wild guppies (Croft *et al.* 2009) and guppies in this study were negatively assorted along this continuum. It appears those with many network neighbours actively chose to associate with others which were similarly well connected.

Suggestions for further work

The real world consequences of degree assortment on the social network of guppies would be best studied by instigating network contagion or loss in replicated networks and noting the route taken of disease or information and/or the effects on network structure after removal, respectively. Contagion experiments have been carried out by Croft *et al.* (2011) on guppy social networks, which showed increased clustering but did not investigate degree assortment. Degree assortment has been shown to be affected by the presence of environmental disruptions to the network such as the presence of predators (Chapter 3) and males (Darden *et al.* 2009). It would be of benefit to understand the function and consequences of this change to network patterning in these circumstances.

7.3 Behavioural phenotypes in social networks

Most animals show non-random assortment in their social networks often found to be due to sex (Fischoff *et al.* 2009) and age (Wolf *et al.* 2007) but has also been found according to behavioural phenotype (Croft *et al.* 2009; Pike *et al.* 2008). This assortment has consequences which go beyond that of the interacting individuals to the wider social network structure. Important processes such as the movement of information (Lai and Wong 2002; Lusseau 2003) and disease (Cross *et al.* 2004; Hamede *et al.* 2009) and the prevalence of cooperation (Nowak and May 1992; Ohtsuki *et al.* 2006) are influenced by non-random structure within social networks. Understanding how individuals interact will allow research to identify informed, vulnerable and cooperative individuals and groups. The position of behavioural phenotypes in social systems will be a result of the individual's social strategies. Bold individuals have shown diminished shoaling tendencies compared to shy (Ward *et al.* 2004a) and have exhibited weaker associations in stickleback social networks (Pike *et al.* 2008) and in a wild mixed sex guppy network (Croft *et al.* 2009). This social structure will shape the evolutionarily important social environment experienced by all individuals within, and is thus an important route of research. Interactions between bold and/or shy individuals can produce differential reactions that are dependent on behavioural phenotype (Magnhagen and Staffan 2005, Frost *et al.* 2007) and can extend to the reaction of the group as a whole (Sih and Watters 2005; Magnhagen and Staffen 2005). The choice of social partners can affect the ability to cooperate in predator inspection (Dugatkin and Alfieri 1991) and the potential profitability of their foraging (Dyer *et al.* 2009). Adult female guppy behaviour might, also, be expected to direct the structure of the social network as a whole, as differences in priorities between the sexes result in males spending most of their time seeking out females when they reach adulthood (Magurran and Seghers 1994b). No work has examined this

important social behaviour at the network level or the structural make up in terms of female behavioural phenotypes.

In Chapter 3 I studied adult female networks in semi-natural ponds and found negative assortment according to behavioural phenotype was a common pattern. In networks where intermediate females were present this assortment was weakly negative. However, in networks with only clearly delineated bold and shy females (Chapter 6) the assortment was much more pronounced. The prevalence of this negative assortment would suggest an enduring social relationship between bold and shy females, which might be enhanced in certain circumstances. Croft *et al.* (2009) suggests this negative assortment is born out of active partner choice. Negative assortment has been shown to enhance feeding rates in guppies by Dyer *et al.* (2009). They suggest shy individuals could be compared to scroungers in a producer-scrounger scenario, relying on the food finding proficiencies of bold, which perhaps benefitted from increased vigilance from the shy. Adult female guppies have been shown to frequent high risk areas within their natural environments (Darden and Croft 2008) in order to avoid male harassment. Enhanced foraging and vigilance in small groups of closely associated females would allow greater survival in these conditions. The pattern of assortment shown here may, therefore, show an adaptive structure to the small female social networks, frequently found in high predation populations.

Suggestions for further work

Guppies have been shown to exhibit sets of correlated behavioural traits (Budaev, 1997, Croft *et al.* 2009; Smith and Blumstein 2010). Studying the correlations these trait-combinations might show with general network positions would produce a detailed depiction of the behavioural repertoires with most influence in the network. This information would also be useful to gauge the impact of the loss of particular individuals on the network's behavioural capacity.

To understand if interactions with bold individuals do, in fact, result in a gain in foraging information (Dyer *et al.* 2009) novel

foraging tasks could be introduced into replicated mixed and same type networks. Network measures would be taken for 1. generalised social and 2. novel foraging behaviour and compared to see if changes in association patterns occur when foraging. An assessment of growth over the testing period would also point to any fitness consequences of this assortative behaviour. The importance of phenotypic variation on a population's ability to survive is clearly not just with regard to its gene pool (Sih et al. 2004). Understanding the impacts the various phenotypes have on each other may help to improve survival if applied to the release of captive individuals for fisheries or conservation purposes.

7.4 Effects of predation on female social network position

Predation has consequences on all aspects of guppy biology. Guppies from environments which differ in the risk of predation have been shown to also exhibit differences in their colouration (Endler 1980), size (Endler 1995), life history (Reznick and Endler 1982), and mating strategies (Magurran and Seghers 1990b) to name a few. A significant affect on the social structure of females might also be expected in light of work on the affect predators exert on guppy shoaling tendency and predator inspection behaviour. Under high predation risk guppies show increased shoal cohesion (Chivers *et al.* 1995) and inspect predators in larger shoals (Magurran and Seghers 1994a).

Network structure

Using replicated networks of female guppies in chapter 3, standard network measures were taken before and after half the sample was subjected to simulated predator events. All but one of these standard network measures were shown to alter significantly in only the predation treatment group. Fish formed tightly associated, well

separated, small clusters and grouped in smaller shoals after predator exposure. This structural make-up would encourage the formation of persistent associations, the foundation for cooperation (Trivers 1971), and place individuals in a better position to cooperate during predator inspection (Magurran and Seghers 1994b). Under predation risk individuals are expected to carry out inspections to ascertain the feeding motivation of the predator (Murphy and Pitcher 1997), which will provide information as to the safety of foraging. Females in high risk predation environments have been shown to exhibit reduced foraging due to male harassment and the need for increase vigilance (Magurran and Seghers 1994b) as they are often found to inhabit riskier areas to avoid male harassment (Darden and Croft 2008). Theoretical models have recently introduced network structures expected to aid the evolution and maintenance of cooperation; small numbers of strongly connected individuals grouped in small clusters within the network (Santos 2006b; Saavedra *et al.* 2009). A simple rule regarding group size was suggested by (Ohtsuki *et al.* 2006). The authors found that cooperation will spread if the average number of network neighbours is lower than the benefit to cost ratio. I would expect this ratio to be relatively low under risk of predation as both the benefits and costs are high. Certainly the results in Chapter 3 indicate a reduction in the number of individuals a focal female associated with as well as reduced shoal sizes under heightened predation risk.

Suggestions for further work

The existence of new technology brings with it many more chances for studying social networks in animals which would have been affected by time constraints or accessibility difficulties previously (Krause *et al.* 2010). Long-term studies of individual networks over continuous time would be especially useful for analysis of the changes in network structure under varying circumstances. Changes to food availability, temperature and fish density could highlight structures

and positions which are easily altered or those which tend to be maintained.

The differences seen in network measures between the treatment and control groups in chapter 3 suggests there may be a cost to particular tight-knit structures when predation level is relaxed. This cost may come from reduced access to greater numbers of innovative foragers in the shy individuals or increased competition from shy scroungers on the bold females (Dyer et al. 2009). An interesting follow-up would be to carry out group sampling utilising a similar experimental protocol but over an extended time period with changes in the level of simulated predation risk. This would highlight any flexibility in network structure which exists due to changes in predation risk. Sampling using focal follows (Whitehead 2008) as well, would highlight any general trend of bold or shy females in instigating or ending social interactions (Harcourt *et al.* 2009; Nomakuchi *et al.* 2010) within a semi-natural group. Again, this information would show which, if any, behavioural type directs the change to network structure under predation pressure.

The importance of behavioural phenotype

The strength of association was shown to be strong in the shy females. This, as well as the presence of partner preference seen only in bold females (Chapter 4) and the tendency of the networks to be negatively assorted and formed from smaller shoals, when undergoing the predation treatment, it appears that these females might be directing the anti-predator response of the network through active partner choice. The correlation found between behavioural type and association strength has been shown in other work (Pike *et al.* 2008; Croft *et al.* 2009). Hanneman and Riddle (2005) suggest that network position provides particular roles within a network, for instance that the degree strength suggests local influence and large degree, global influence. The reduced degree but increased association strength seen in Chapter 3 would point to a change from a global to local influence.

This pattern has been shown to result in better feeding and is suggested to improve vigilance for bold members (Dyer *et al.* 2009) and so the motivation, mechanism, and group formation are in place for the likelihood of cooperative predator inspection to occur. Correlations accompanying bold and shy behavioural phenotypes (shoaling tendency, activity) might suggest these individuals also differ in their cooperative behaviour. Shyness has been linked to greater cooperative behaviour (Bergmüller *et al.* 2010) which shows much variation. The social patterning, shown here could, therefore, be due to a mutually beneficial assortment. With bold fish better able to find food (Wilson *et al.* 1993; Magnhagen and Staffan 2003; Dyer *et al.* 2009) and shy the more proficient co-operators during inspection; the combination would prove effective defence under high predation risk.

Suggestions for further work

Major changes have been shown to occur in female guppy social (Darden *et al.* 2009) and environmental circumstances (Darden and Croft 2008) due to male harassment. These, together with the similarities and differences seen between social network structures induced by males and predators, would suggest there is interest in further work studying the effects in combination. Exposure to male harassment may reduce the likelihood of cooperation due to the reduction in association strength. In fact, Darden *et al.* (2009) found a lack of a preference for familiar females in the group exposed to male harassment, indicating that cooperation in these individuals is likely to be inhibited. Exposure to predation, on the other hand, might result in an increase in cooperation due to the increased association strength and decreased degree found in Chapter 3. Comparison of networks from populations varying in predation risk and sex ratio would add a further layer in understanding the various pressures on these important female social connections.

7.5 The affect of social interactions on growth

Growth shows both intra and inter-individual variation in fish which exhibit indeterminate growth. Furthermore, it has been suggested that this variation is linked to variation in behavioural phenotype (Stamps 2007). Faster growing individuals are also bold, which enables them to access resources contributing to growth but which also increase the risk of mortality. The relationship between growth rate with the bold-shy behavioural continuum in fish remains theoretical. However, various aspects related to the bold-shy continuum would be expected to influence growth such as the differential interactions within the social environment seen in bold and shy individuals (Magnhagen and Staffan 2005). The first part of the study in chapter 6, therefore, quantifies the affects of social interactions on growth, by grouping small sets of bold and shy females and taking social network and growth data over a short period of time.

In this study, growth could not be predicted by network position and females did not assort by growth. Considering the reported differential affects of group position on the ability to feed (Black *et al.* 1992) and the reduction of competition with assortment (Lindström and Ranta 1993; Ward and Krause 2001), it would be expected that individuals would be positioned within the group in a non-random manner which were related to growth. However, without clear differences in body length, individuals may have used behavioural type as a proxy for both competitive ability (Ranta *et al.* 1993) and growth (Stamps 2007).

No differences in growth rates were seen between individual behavioural types over the first period when only females were grouped together. This lack of growth differences may be due to the establishment of a producer-scrounger system, where equal nutritional gains are acquired by the two contrasting strategies. It is also possible that differences in growth rates between behavioural types are only

seen when the ecological environment selects for a growth-mortality trade off.

Suggestions for further work

In light of the correlation seen between size and the bold-shy continuum (Brown *et al.* 2007) and the size assorted shoaling witnessed in Poeciliids (Croft *et al.* 2005), an interesting addition to this study would be an investigation into the changes to assortment using bold and shy females of varying sizes. Would associations according to behavioural phenotype remain when fish can make clear choices based on size differences?

In the current investigation all fish were housed in the absence of predation risk. It would be interesting to examine how growth rates differ between individuals that are under predation threat. Under such conditions we may expect to see differences in growth based on behavioural type as, for instance, bold fish would be predicted to trade off risk for increased access to food (Stamps 2007; Wolf *et al.* 2007).

7.6 Behavioural phenotypes and their choices

The fact that individuals group non-randomly and there are contrasts between individuals in the costs and benefits of joining and staying with a group, suggests that partner choice has a large role to play in the grouping of individuals. Furthermore, many shoals are large which may prohibit the global assessment of the shoal and lead to the adoption of local decisions (Ward *et al.* 2004b). These choices are therefore, most likely to be directed towards those individuals, within the shoal, which are closest to the chooser. Partner choice has been shown to be influenced by size (Pitcher *et al.* 1986; Lachlan *et al.* 1998), competitive ability (Dugatkin and Wilson 1992; Metcalfe and Thomson 1995) and familiarity (Griffiths and Magurran 1999; Barber and Wright 2001) and often results in groups being assorted according to various characteristics. The various benefits assigned to assortment

include increased foraging rates (Ward and Krause, 2001) and reduction of competition (Ranta *et al.* 1993). In guppies, assortment has been shown to occur according to sex (Croft *et al.* 2004a), size (Croft *et al.* 2005) and behavioural type (Croft *et al.* 2009). Importantly, guppy females show persistent associations, which indicates the formation of familiarity and which can aid cooperation. Males have also shown an ability to develop familiarity but their interactions appear to be less discriminate, which is thought to relate to their mating priorities. With knowledge of the suite of behaviours commonly associated with the bold shy continuum (activity, shoaling tendency, predation inspection) one might expect the various behavioural phenotypes to differ in the manner of their interactions.

Females choosing female partners

In light of the association patterns shown in Chapters 3 and 6, assessment of the choices of females for other female partners was an important process in understanding the mechanisms for assortment. Using binary choice tests, female guppies were given a choice between stimulus shoals of two females of similar behavioural phenotype but which differed in visual and olfactory familiarity and between single bold and shy stimulus females which were both unfamiliar to the focal fish. No preferences for familiarity occurred, but shy fish showed a significant preference according to behavioural phenotype. The bold fish showed no such discrimination. This pattern is very similar to that found in a novel foraging test in guppies (Dyer *et al.* 2009) and which resulted in more females in mixed groups feeding than in either all bold or all shy groups. The authors suggested that shy females followed the bold to the novel food due to the greater ability of the bold to find food and the shy's ability to scrounge. The bold, in return, gained from increased vigilance from the risk-averse shy female. Previous discussion has commented on the suggestion that shy fish may be the drivers of group behaviour. This work adds to that discussion, which will not be repeated here. The lack of discrimination

in the bold females may be due to a trade-off between the development of a preference and foraging innovation. Even in light of the potential vigilance benefits they may gain from this association, the bold may still not need to choose, if it is a general strategy of the shy female to follow the bold.

Understanding the strategies behind partner choice is key to understanding the network interactions and structure. The group structure has been shown to direct how the group performs as a whole. The phenotypic mix can alter the group's mating success (Sih and Watters 2005) and feeding (Magnhagen and Staffan 2005; Dyer *et al.* 2009). The dynamic nature of the Trinidadian guppy environments might lead to changes in the strength of the preferences due to varying levels of food or fish densities.

Suggestions for further work

Guppies live in fission-fusion societies with much inter-shoal exchange but also show persistent pair-wise interactions (Croft et al. 2003a; 2004b). An interesting study would be to see how female choice changes with a change in the group in which individuals are housed. Clear fitness benefits are apparent when an individual associates with another of the opposite behavioural type and this extends to mixed type groups (Dyer et al. 2009). However, Magnhagen and Staffan (2005) found that bold and shy individuals responded to a change in group partners differentially and this affected the manner in which individuals fed. Testing for preferences before and after individuals experience a change in social grouping either from same type to a mixed shoal or vice versa, might indicate a flexibility in behaviour in response to altered social circumstances in one or both phenotypes.

Identifying individuals, in order to form mixed shoals from which preferences for bold and shy *familiar* females can be tested, would improve the biological relevance of the results. Although female guppies have been shown to form persistent pairings in wild social network (Croft *et al.* 2004b) this choice was likely to have been

made from within a mixed group of familiar individuals. Replicating these circumstances and noting which individuals exhibit preferences and for whom would add to our understanding of the formation of these particularly important female bonds. Of course, testing wild populations both under laboratory conditions and in the wild would be of greater benefit to understanding natural behaviour patterns.

Male mate choice

Male mating priorities are expected to reduce their need to exhibit choosiness in comparison to females (Houde 1997), with the reliance on the presence of novelty being sufficient to ensure the success of their matings (Kelley *et al.* 1999). However, theory suggests males will benefit from being choosy if females differ in their quality and the time to finding a receptive mate is relatively small (Hubbell and Johnson 1987). The preference for particular females is expected to impact on female choice (Magurran and Seghers 1994b) and is therefore an important aspect of mate choice. The patterning of female social networks according to behavioural phenotype in Chapters 3 and 6 directed this further study towards understanding whether and how males choose between bold and shy females. The intended outcome was to illuminate the mechanisms of male harassment on the social structure of females (Darden *et al.* 2009).

Bold and shy males were given a binary choice of single bold or shy females which were from a familiar habitat in one test and from an unfamiliar habitat in the other. I found that males preferred to shoal with females of a similar behavioural phenotype to themselves when they were from a familiar habitat, but this preference switched entirely when the females came from an unfamiliar habitat. The assortative pattern shown between males and females from a familiar habitat is indicative of the adaptive assortative mating patterns seen in various other species (Dingemanse *et al.* 2004; Both *et al.* 2005; Sinn *et al.* 2006). However, in the absence of parental care, choices would need to be directed by indirect genetic benefits. This has been suggested to be the motivation behind female guppy choice of bold males (Godin

and Dugatkin 1996) but could only produce the assortment shown in the current study if bold and shy females are of equal quality and then only in combination with the same type male. The pattern of positive type assortment may also result passively from shared activity patterns, according to behavioural phenotype, which would lead bold males and females into riskier habitats in their increased search for food. Under either scenario, if these choices result in fertilisations, it could help to maintain behavioural type variation in populations which are frequently isolated for extended periods of time (i.e due to drought conditions) and may enhance the ability to adapt to changing conditions in founder populations.

Males have shown highly plastic mating behaviour, especially in response to changing levels of risk and differences in female familiarity. Switching mating behaviour and choice is suggested to be adaptive when predation risk or encounter rate alter (Magurran and Seghers 1990b; Simcox *et al.* 2005; Gowaty and Hubbell 2009) and the males in this study were expected to associate unfamiliar female presence with heightened risk of predation. The threat towards bold and shy males might be expected to vary in accordance to the conspicuousness of their behaviour. The differential response of males of differing behavioural type might, therefore, be related to the manner in which bold and shy males respond to an increased perception of risk. Bold males may utilise safe environments and shy males may increase their shoaling behaviour as an initial response to changing environmental cues. Both behaviours may bring them into contact with certain female behavioural types, as individuals have been shown to utilise different habitats according to their behavioural type (Wilson *et al.* 1993). However, this was not found to be the case in one wild guppy population by Croft *et al.* (2009). At present the discussion of this pattern is purely speculative and would greatly benefit from further work.

Suggestions for further work

Clearly this study would be immediately enhanced by gaining repeatability scores in boldness and shyness prior to treatment and testing taking place. Although male behaviour has been shown to be highly plastic (Endler 1987; Magurran and Seghers 1990b; Magellan and Magurran 2006), the lack of repeatability in this study reduces the ability to make valuable conclusions.

Studying initial male choices, where males have direct access to several bold and shy females and are then introduced to novel bold and shy individuals, which do not differ in size or receptivity to each other, would provide a more realistic quantification of male mate choice.

Further work assessing the preferences of males from populations which vary in predation level might provide further support for or help to dispel the suggestion, made in Chapter 5, that the switch in male preferences are a result of reaction to changes in perceived risk. Individuals from different predation regimes might experience differing perceptions of threat due to their predation history with those from high predation showing significant changes as seen in Chapter 5, whereas those from low predation would show no such change with differences in female familiarity (Kelley and Magurran 2003; Morrell et al. 2008). Preference-testing under threat of predation would further clarify or discount this suggestion.

Breeding experiments, mating males of different behavioural type with females of both types and examining fitness metrics such as growth and number of offspring, would indicate a fitness consequence of male mate choice.

7.7 Social influences on female growth

The second part of the experiment, in Chapter 6, quantified fitness affects of male harassment by introducing males or small females (as

a control) into established female networks and measured growth. The effects of male harassment on females are varied and include loss of foraging time (Magurran and Seghers 1994b); increased injury and energetic costs (Mühlhaüser and Blanckenhorn 2002; Valero *et al.* 2008) and heightened predation (Arnqvist 1989; Pocklington and Dill 1995). Socially, females formed less closely connected groups when in the presence of males, which affected their ability to develop social familiarity (Darden *et al.* 2009). This social disruption could lead to reduced foraging success (Pilastro *et al.* 2003) and increased aggression (Utne-Palm and Hart 2000) both of which can impact on growth.

In this study bold females appeared to show a reduced rate of weight gain in the small female treatment group whereas shy females in contrast showed a tendency towards a reduced rate in the male treatment group. The affect of small females on the bold is likely to be related to density effects on feeding (Smith and Sargent 2006; Sanchez *et al.* 2010). More "scroungers" and/or "producers" would impact on the bold fish due to increased competition both in keeping and finding food, whereas shy females would benefit from an increased number of producers if they are to be regarded as scroungers (Dyer *et al.* 2009). However, the effect of males on shy female growth is likely to be the consequence of increased energy expenditure in relation to gain. This could be due to increased or decreased (leading to loss of foraging time) avoidance activity or to the disruption of bold-shy foraging associations (Dyer *et al.* 2009) which would have a greater impact on the shy fish (due to their expected reliance on the bold's ability to find food).

Suggestions for further work

Both increased and decreased growth rates can have major impacts on reproduction, dominance position and survival amongst other things (reviewed in Mangel and Munch 2005). Further investigation of the impact on growth of male harassment and female density for specific female behavioural phenotypes would be illuminating. An extended

time period in which regular measurements are taken (Weatherley and Gill 1987) from individuals held alone, with small females and with males would clarify the findings of this study. Moreover, an adaptation to the network experiments by Darden *et al.* (2009) with individuals identified as bold and shy and measured for growth would illuminate whether males are disproportionately affecting the shy females in terms of both network position and growth rate.

In situ experiments, particularly in this case, would be of benefit, as the food available in the experimental pool would be different to that available in the flowing waters of their original pool. This would entail testing fish for increases in growth within compounds within their original pools and with introductions from male and small female fish from within the same original pool.

7.7 Conclusions

Female guppy social networks were positively assorted according to behavioural phenotype. Shy females were shown to exhibit a preference for bold females which suggests this assortment is common to guppies and may be directed by shy individuals. Furthermore, shy and bold females differed in growth rate according to varying social conditions. Male guppies which exhibited behaviour which was on average bold or shy also showed a preference according to behavioural phenotype in stimulus females, but this preference differed according to level of habitat familiarity.

The consequences of these preferences according to behavioural phenotype extend beyond the obvious importance in terms of observation of individual differences in behavioural tests (Sih *et al.* 2004) and sampling of populations (Biro and Dingemanse 2010). The interactions between individuals which have varying abilities (Marchetti and Drent 2000; Koolhaas *et al.* 2001; Dugatkin and Alfieri 2003); tendencies (Fraser *et al.* 2001; Ward *et al.* 2004a;

Johnson and Sih 2007) and, potentially, priorities (Stamps 2007, Biro and Stamps 2008; Wolf *et al.* 2008) will enhance group activities (Dyer *et al.* 2009; Kurvers *et al.* 2009;) but can also disrupt them (Sih and Watters 2005). The position of individuals within the group will impact on their own social experiences and those of their neighbours. The social structure and behaviour of the group as a whole has also been shown to be affected by individuals within the group (Flack *et al.* 2006; Darden *et al.* 2009; Lusseau and Conradt 2009).

The pattern of dissassortative shoaling according to behavioural phenotype (Chapters 3 and 6) and the partner choice tests showing a significant preference in only the shy females, which was towards the bold, in Chapter 4, may well be a result of active partner choice in shy females. These three separate pieces of work all indicate that shy females perform an important role in directing the structure of the network. This work highlights the importance of directing efforts to ensure the "correct" social make-up of groups which are released as part of a conservation effort or in order to replenish human food supplies in fish hatcheries, for example. Certain release efforts in fish have shown that particular phenotypes are less able to survive in natural conditions, potentially disrupting wild populations (reviewed in Huntingford 2004). As well as hatchery breeding conditions which can select for fast-growing, risk-prone individuals, the initial and subsequent sampling of wild fish may itself select for bolder individuals with which to breed (Wilson et al 1993; Biro and Dingemanse 2010). Releases may, therefore, largely consist of bold individuals. The breeding and release of an appropriate mix of individual behavioural types or "life skills training" (Brown and Laland 2001) involving a mixture of behavioural types with their concomitant varied strategies, may help to mediate this difficulty, enhancing survival of both the introduced and natural populations. In addition the impact on female growth by male behaviour was shown to differ in the current study according to the behavioural type of the individual. Males were also shown to exhibit preferences for females according to her behavioural type. The direction and therefore impact

of male attention of hatchery-bred males would be significant if, as suggested, bolder individuals are sampled more often.

The inclusion of behavioural type in Social Network Analysis can add to the understanding of various processes within animal populations such as disease dynamics (Cross *et al.* 2004; Hamede *et al.* 2009) and the affect of loss on network structure (Flack *et al.* 2006; Williams and Lusseau 2006). For example, the removal of shy individuals, which exhibit strong associations (Croft *et al.* 2009) and assortatively shoal with bold (Chapters 3 and 6), may result in greater social exclusion of the bold fish, which have fewer network ties (Croft *et al.* 2009).

Finally, understanding of the likely impact of invasive species (Beyer *et al.* 2010; Cote *et al.* 2010) or the ability of a species to adapt to environmental or man-made impacts (Williams and Lusseau 2006) will also benefit from a fuller understanding of how individuals interact and how this might be altered by influences both internal and external to the network. The combination of network metrics with behavioural type would enhance understanding about which individuals inhabited certain roles for risk assessment purposes.

References

Abrahams, M.V. 1993 The trade-off between foraging and courting in male guppies. Animal Behaviour, **45**, 673-81.

Altman, D.G. and Gardner, M.J. 1988 Calculating confidence intervals for regression and correlation. British Medical Journal, **296**, 1238-42.

Andersson, M. 1994 Sexual Selection, Monographs in behavior and Ecology, Princeton University Press, Princeton, N.J.

Arendt, J.D. 1997 Adaptive intrinsic growth rates: An integration across taxa, The Quarterly Review of Biology, **72**, 149-77.

Arnqvist, G. 1989 Multiple mating in a water strider: mutual benefits or intersexual conflict? Animal Behaviour, **38**, 749-56.

Auer, S.K.; Arendt, J.D.; Chandramouli, R. and Reznick, D.N. 2010 Juvenile compensatory growth has negative consequences for reproduction in Trinidadian guppies (*Poecilia reticulata*). Ecology letters, **13**, 998-1007.

Axelrod, R. and Hamilton, W.D. 1981 The Evolution of cooperation. Science, **211**, 1390-96.

Baerends, G.P.; Brouwer, R and Waterbolk, H.TJ. 1955 Ethological studies on *Lebistes reticulatus* (Peters). I. An analysis of the male courtship pattern. Behaviour, **8**, 249-334.

Baird, R.W. and Dill, L.M. 1996 Ecological and social determinants of group size in transient killer whales. Behavioral Ecology, **7**, 408-16.

Barber, I. and Wright, H. 2001 How strong are familiarity preferences in shoaling fish? Animal Behaviour, **61**, 975-79.

Beauchamp, G. 2010 Relationship between distance to cover, vigilance and group size in staging flocks of semipalmated sandpipers. Ethology, **116**, 645-52.

Bednekoff, P.A. and Lima, S.L. 1998 Randomness, chaos and confusion in the study of antipredator vigilance. Trends in Ecology and Evolution, **13**, 284-87.

Bejder, L.; Fletcher, D. & Bräger, S. 1998. A method for testing association patterns of social animals. Animal Behaviour, **56**, 719-725.

Bell A.M. 2005 Behavioural differences between individuals and two populations of stickleback (*Gasterosteus aculeatus*). Journal of Evolutionary Biology, **18**, 464-473.

Bell A.M. 2007 Future directions in behavioural syndromes research. Proceedings of the Royal Society B., **274**, 755-61.

Benjamini, Y. and Hochberg, Y. 1995 Controlling the false discovery rate: a practical and powerful approach to multiple testing. Journal of the Royal Statistical Society series B-methodological, **57**, 289-300.

Bergmüller, R.; Schürch, R. and Hamilton, I.M. 2010 Evolutionary causes and consequences of consistent individual variation in cooperative behaviour. Philosophical Transactions of the Royal Society B-Biological Sciences, **365**, 2751-2764.

Beyer, K.; Gozlan, R.E.; Copp, G.H. (2010) Social network properties within a fish assemblage invaded by non-native sunbleak *Leucaspius delineatus*. Ecological Modelling, **221**, 2118-22.

Biro, P.A. and Dingemanse, N.J. 2009 Sampling bias resulting from animal personality. Trends in Ecology and Evolution, **24**, 66-67.

Biro, P.A. and Stamps, J. 2008 Are animal personality traits linked to life-history productivity? Trends in Ecology and Evolution, **23**, 361-68.

Black, J.M.; Carbone, C.; Wells, R.L. and Owen, M. 1992 Foraging dynamics in goose flock: the costs of living in flocks. Animal Behaviour, **44**, 41-50.

Blumstein, D.T.; Holland, B.-D and Daniel, J.C. 2006 Predator discrimination and 'personality' in captive Vancouver Island marmots (*Marmota vancouverensis*). Animal Conservation, **9**, 274-82.

Boon, A.K.; Réale, D and Boutin, S. 2008 Personality, habitat use, and their consequences for survival in North American red squirrels *Tamiasciurus hudsonicus*. Oikos, **117**, 1321-28.

Borgatti, S.P., Everett, M.G. & Freeman, L.C. 2002. Ucinet for Windows: Software for Social Network Analysis. Harvard: Analytic Technologies.

Both, C.; Dingemanse, N. J.; Drent, P.J. and Tinbergen, J. M. 2005 Pairs of extreme avian personalities have highest reproductive success, Journal of Animal Ecology, **74**, 667-74.

Brede, M and Sinha, S. 2005 Assortative mixing by degree makes a network more unstable. arXiv:cond-mat/0507710v1

Brick, O. 1998 Fighting behaviour, vigilance and predation risk in the cichlid fish Nannacara anomala. Animal Behaviour, **56**, 309-17.

Brown, C.R. and Brown, M.B. 1986 Ectoparasitism as a cost of coloniality in cliff swallows (*Hirundo pyrrhonota*). Ecology, **67**, 1206-1218.

Brown, C. and Laland, K. (2001) Social learning and life skill training for hatchery reared fish. Journal of Fish Biology, **59**, 471-93.

Brown, C.; Jones, F. and Braithwaite, V.A. 2007 Correlations between boldness and body mass in natural populations of the poeciliid *Brachyrhaphis episcopi*. Journal of Fish Biology, **71**, 1590-1601.

Brown, G.E.; Macnaughton, C.J.; Elvidge, C.K.; Ramnarine, I. and Godin, J.-G. J. 2009 Provenance and threat-sensitive predator avoidance patterns in wild caught Trinidadian guppies. Behavioral Ecology and Sociobiology, **63**, 699-706.

Cairns, S.J. and Schwager, S.J. 1987 A comparison of association indices. Animal Behaviour, **35**, 1454-69.

Careau, V.; Thomas, D.; Humphries, M.M. and Réale, D. 2008 Energy metabolism and animal personality. Oikos, **117**, 641-53.

Cassar, A. 2007. Coordination and cooperation in local, random and small world networks: experimental evidence. Games and Economic Behaviour, **58**, 209-230.

Chivers, D.P.; Brown, G.E. and Smith, R.J.F. 1995 Familiarity and shoal cohesion in fathead minnows (Pimephales promelas): implications for antipredator behaviour. Canadian Journal of Zoology – Revue Canadienne de Zoologie, **73**, 955-60.

Christal, J. & Whitehead, H. 2001 Social affiliations within sperm whale (*Physeter macrocephalus*) groups. Ethology, **107**, 323-340.

Clutton-Brock, T. and Langley, P. 1997 Persistent courtship reduces male and female longevity in captive flies *Glossina morsitans morsitans* Westwood (Diptera: Glossinidae). Behavioral Ecology, **8**, 392-95.

Clutton-Brock, T.H.; Guinness, F.E. and Albon, S.D. 1982 Red Deer: behaviour and ecology of the two sexes. Edinburgh University Press, Edinburgh.

Coleman, K. and Wilson, D.S. 1998 Shyness and boldness in pumpkinseed sunfish: individual differences are context specific. Animal Behaviour, **56**, 927-936.

Conradt, L. and Roper, T.J. 2000 Activity synchrony and social cohesion: a fission-fusion model. Proceedings of the Royal Society B, **267**, 2213-18.

Cortina, J.M. and Nouri, H. 2000 Effect sizes for ANOVA designs. SAGE Publications, Inc. London.

Cote, J.; Fogarty, S.; Weinersmith, K.; Brodin, T. and Sih, A. 2010 Personality traits and dispersal tendency in the invasive mosquitofish (*Gambusia affinis*). Proceedings of the Royal Society B., **277**, 1571-79.

Coussi-Korbel, S. and Fragaszy, D.M. 1995 On the relation between social dynamics and social learning. Animal Behaviour, **50**, 1441-53.

Croft, D.P.; Arrowsmith, B.J.; Bielby, J.; Skinner, K.; White, E.; Couzin, I.D.; Magurran, A.E.; Ramnarine, I. and Krause, J. 2003a Mechanisms underlying shoal composition in the Trinidadian guppy, *Poecilia reticulata* OIKOS, **100**, 429-438.

Croft, D.P.; Krause, J.; Couzin, I.D. and Pitcher, T.J. 2003b When fish shoals meet: outcomes for evolution and fisheries. Fish and Fisheries, **4**, 138-146.

Croft, D.P.; Albanese, B.; Arrowsmith, B.J.; Botham, M.; Webster, M. and Krause, J. 2003c Sex-biased movement in the guppy (Poecilia reticulata), Oecologia, **137**, 62-68.

Croft, D.P.; Botham, M. and Krause, J. 2004a Is sexual segregation in the guppy, *Poecilia reticulata*, consistent with the predation risk hypothesis? Environmental biology of fishes, **71**, 127-133.

Croft, D.P.; Krause, J & James, R. 2004b. Social networks in the guppy (*Poecilia reticulata*). Proceedings of the Royal Society B, **271**, 516-519.

Croft, D.P.; James, R.; Ward, A.J.W.; Botham, M.S. Mawdsley, D. and Krause, J. 2005 Assortative interactions and social networks in fish. Oecologia, **143**, 211-19.

Croft, D.P.; James, R.; Thomas, P.O.R.; Hathaway, C.; Mawdsley, D.; Laland, K.N. and Krause, J. 2006a Social structure and co-operative interaction in a wild population of guppies (*Poecilia reticulata*). Behavioral Ecology and Sociobiology, **59**, 644-650.

Croft, D.P.; Morrell, L.J.; Wade, A.S.; Piyapong, C.; Ioannou, C.C.; Dyer, J.R.G.; Chapman, B.B.; Wong, Y. and Krause, J. 2006b Predation risk as a driving force for sexual segregation: a cross-population comparison. The American Naturalist, **167**, 867-78.

Croft, D.P.; James, R. and Krause, J. 2008 Exploring Animal Social Networks. Princeton University Press, Woodstock, Oxfordshire.

Croft, D.P.; Krause, J. Darden, S.K.; Ramnarine, I.W.; Faria, J.J and James, R. 2009 Behavioural trait assortment in a social network: patterns and implications, Behavioral Ecology and Sociobiology, **63**, 1495-1503.

Croft, D.P.; Madden, J.R.; Franks, D.W. and James, R. 2011 Hypothesis testing in animal social networks. Trends in Ecology and Evolution, **26**, 502-7.

Croft, D.P.; Edenbrow, M.; Darden, S.K.; Ramnarine, I.W. and van Oosterhout, C. 2011 Effect of gyrodactylid ectoparasites on host behaviour and social network structure in guppies *Poecilia reticulata*.

Behavioural Ecology and Sociobiology, DOI: 10.1007/s00265-011-1230-2.

Cross, P.C.; Lloyd-Smith, J.O.; Bowers, J.A.; Hay, C.T.; Hofmeyr, M and Getz, W.M. 2004 Integrating association data and disease dynamics in a social ungulate: bovine tuberculosis in African buffalo in the Kruger National Park. Annales Zoologici Fennici, **41**, 879-92.

Dall, S.R.X.; Houston, A.I. and McNamara, J.M. 2004 The behavioural ecology of personality: consistent individual differences from an adaptive perspective. Ecology Letters, **7**, 734-39.

Darden, S.K. and Croft, D.P. 2008 Male harassment drives females to alter habitat use and leads to segregation of the sexes. Biology Letters, **4**, 449-451.

Darden, S.K.; James, R.; Ramnarine, I.W. and Croft, D.P. 2009 Social implications of the battle of the sexes: sexual harassment disrupts female sociality and social recognition. Proceedings of the Royal Society B, **276**, 2651-56.

Davies, C.R.; Ayers, J.M. and Deane, L.M. 1991 Malaria infection rate of Amazonian primates increases with body weight and group size. Functional Ecology, **5**, 655-62.

DeWitt, T.J.; Sih, A. and Wilson, D.S. 1998 Costs and limits of phenotypic plasticity. Trends in Ecology and Evoluion, **13**, 77-81.

Dingemanse, N.J. 2003 Natural selection and avian personality in a fluctuating environment. **PhD Thesis**, University of Utrecht.

Dingemanse, N.J.; Both, C.; Drent, P.J.; van Oers, K. and van Noordwijk, A.J. 2002 Repeatability and heritability of exploratory behaviour in great tits from the wild. Animal Behaviour, **64**, 929-38.

Dingemanse, N.J.; Both, C.; van Noordwijk, A.J.; Rutten, A.L. and Drent, P.J. 2003 Natal dispersal and personalities in great tits (*Parus major*). Proceedings of the Royal Society B, **270**, 741-747.

Dingemanse, N.J.; Both, C.; Drent, P.J. and Tinbergen, J.M. 2004 Fitness consequences of avian personalities in a fluctuating environment, Proceedings of the Royal Society B, **271**, 847-52.

Dingemanse, N.J.; Wright, J.; Kazem, A.J.N.; Thomas, D.K.; Hickling, R. and Dawnay, N. 2007 Behavioural syndromes differ predictably between 12 populations of three-spined stickleback. Journal of Animal Ecology, **76**, 1128-1138.

Dingemanse, N.J.; Kazem, A.J.N.; Réale, D. and Wright, J. 2010 Behavioural reaction norms: animal personality meets individual plasticity. Trends in Ecology and Evolution, **25**, 81-89.

Dosen, L.D. and Montgomerie, R. 2004 Female size influences mate preferences of male guppies. Ethology, **110**, 245-55.

Duckworth, R.A. 2006 Behavioural correlations across breeding contexts provide a mechanism for a cost of aggression. Behavioural Ecology, **17**, 1011-1019.

Dugatkin, L.A. 1988 Do guppies play TIT FOR TAT during predator inspection visits? Behavioral Ecology Sociobiology, **23**, 395-99.

Dugatkin, L.A. and Alfieri, M. 1991 Tit-for-tat in guppies (Poecilia reticulata): the relative nature of cooperation and defection during predator inspection. Evolutionary Ecology, **5**, 300-09.

Dugatkin, L.A. and Alfieri, M. 1992 Interpopulational differences in the use of the Tit-For-Tat strategy during predator inspection in the guppy, *Poecilia reticulata*. Evolutionary Ecology, **6**, 519-26.

Dugatkin, L.A. and Alfieri, M. 2003 Boldness, behavioral inhibition and learning. Ethology, Ecology and Evolution, **15**, 43-49.

Dugatkin, L. A. and Sih, A. 1995 Essay on contemporary issues in ethology. Ethology, **99**, 265-77.

Dugatkin, L. A. and Wilson, D.S. 1992 The prerequisites for strategic behaviour in bluegill sunfish, *Lepomis macrochirus*, Animal Behaviour, **44**, 223-230.

Dugatkin, L.A.; Fitzgerald, G.J. and Lavoie, J. 1994b Juvenile three-spined sticklebacks avoid parasitised conspecifics. Environmental Biology of fishes, **39**, 215-218.

Duncan, P. and Vigne, N. 1974 The effect of group size in horses on the rate of attacks by blood-sucking flies. Animal Behaviour, **27**, 623-25.

Dyer, J.R.G.; Croft, D.P.; Morrell, L.J. and Krause, J. 2009 "Shoal composition determines foraging success in the guppy", Behavioral Ecology, **20**, 165-71.

Eaves, L.J.; Martin, N.G.; Heath, A.C.; Hewitt, J.K. and Neale, M.C. 1990 Personality and reproductive fitness. Behavior Genetics, **20**, 563-68.

Endler, J.A. 1980 Natural selection on color patterns in Poecilia reticulata. Evolution, **34**, 76-91.

Endler, J.A. 1983 Natural and sexual selection on color patterns in poeciliid fishes, Environmental Biology of Fishes, **9**, 173-190.

Endler, J.A. 1987 Predation, light intensity and courtship behaviour in *Poecilia reticulata* (Pisces: Poeciliidae). Animal Behaviour, **35**, 1376-85.

Endler, J.A. 1995 Multiple-trait coevolution and environmental gradients in guppies. Trends in Ecology and Evolution, **10**, 22-29.

Erhard, H.W.; Boissy, A.; Rae, M.T. and Rhind, S.M. 2004 Effects of prenatal undernutrition on emotional reactivity and cognitive flexibility in adult sheep. Behavioural Brain Research, **151**, 25-35.

Farr, J.A. 1975 The Role of Predation in the Evolution of Social Behavior of Natural Populations of the Guppy, Poecilia reticulata (Pisces: Poeciliidae), Evolution, **29**, 151-158.

Farr, J.A. 1980 Social behavior patterns as determinants of reproductive success in the guppy, Poecilia reticulata Peters (Pisces:Poeciliidae). Behaviour, **74**, 38-90.

Filatova, O.A.; Fedutin, I.D.; Ivkovich, T.V.; Nagaylik, M.M.; Burdin, A.M and Hoyt, E. 2009 the function of multi-pod aggregations of fish-eating killer whales (Orcinus orca) in Kamchatka, far east Russia. Journal of Ethology, **27**, 333-341.

Fischoff, I.R.; Dushoff, J.; Sundaresan, S.R.; Cordingley, J.E. and Rubenstein, D.I. 2009 Reproductive status influences group size and persistence of bonds in male plains zebra (Equus burchelli). Behav Behavioral Ecology Sociobiology, **63**, 1035-43.

Flack, J.C., Girvan, M., de Waal, F.B.M. and Krakauer, D.C. 2006 Policing stabilizes construction of social niches in primates. Nature, **439**, 426-9.

Foster, W.A and Treherne, J.E. 1981 Evidence for the dilution effect in the selfish herd from fish predation on a marine insect. Nature, **293**, 466-67.

Franks, D.W.; James, R.; Noble. J. & Ruxton, G.D. 2009 A foundation for developing a methodology for social network sampling. Behavioral Ecology Sociobiology, **63**, 1079-88.

Franks, D.W.; James, R. & Ruxton, G.D. 2010 Sampling Animal Association Networks with the Gambit of the Group. Behavioral Ecology Sociobiology, **64**, 493-503.

Fraser, D.W. and Gilliam, J.F. 1987 Feeding under predation hazard: response of the guppy and Hart's rivulus from sites with contrasting predation hazard. Behavioral Ecology Sociobiology, **21**, 203-09.

Fraser, D.F.; Gilliam, J.F.; Daley, M.J.; Le, A.N. and Skalski, G.T. 2001 Explaining leptokurtic movement distributions: Intrapopulation variation in boldness and exploration. American Naturalist, **158**, 124-135.

Freeman, L.C.; Borgatti, S.P. and White, D.R. 1991 Centrality in valued graphs: a measure of betweenness based on network flow. Social Networks, **13**, 141-54.

Frost, A.J.; Winrow-Giffen, A.; Ashley, P.J. and Sneddon, L.U. 2007 Plasticity in animal personality traits: does prior experience alter the degree of boldness? Proceedings of the Royal Society B, **274**, 333-39.

Gardner, M.J. and Altman, D.G. 1986 Confidence intervals rather than Pvalues: estimation rather than hypothesis testing. British Medical Journal, **292**, 746-50.

Godin, J.-G.J. 1995 Predation risk and alternative mating tactics in male Trinidadian guppies (*Poecilia reticulata*). Oecologia, **103**, 224-9.

Godin, J-G.J. and Dugatkin, L.A. 1996 Female mating preference for bold males in the guppy, Poecilia reticulata. Proceedings of the National Academy of Sciences of the United States of America, **93**, 10262-67.

Grether, G.F.; Millie, D.F.; Bryant, M.J.; Reznick, D.N. and Mayea, W. 2001 Rain forest canopy cover, resource availability and life history evolution in guppies. Ecology, **82**, 1546-59.

Griffiths, S.W. and Magurran, A.E. 1997a Familiarity in schooling fish: how long does it take to acquire? Animal Behaviour, **53**, 945-49.

Griffiths, S.W. and Magurran, A.E. 1997b Schooling preferences for familiar fish vary with group size in a wild guppy population. Proceedings of the Royal Society B, **264**, 547-51.

Griffiths, S.W. and Magurran, A.E. 1998 Sex and schooling behaviour in the Trinidadian guppy. Animal Behaviour, **56**, 689-693.

Griffiths, S.W. and Magurran, A.E. 1999 Schooling decisions in guppies (Poecilia reticulata) are based on familiarity rather than kin recognition by phenotype matching, Behavioral Ecology Sociobiology, **45**, 437-43.

Guevara-Fiore, P.; Stapley, J.; Krause, J.; Ramnarine, I.W. and Watt, P.J. 2010 Male mate-searching strategies and female cues: how do male guppies find receptive females? Animal Behaviour, **79**, 1191-1197.

Hain, T.J.A. and Neff, B.D. 2007 Multiple paternity and kin recognition mechanisms in a guppy population. Molecular Ecology, **16**, 3938-46.

Halliday, T.R. 1983 The study of mate choice **in** Mate Choice, ed Bateson, P., Cambridge University Press, Cambridge, UK.

Hamede, R.K.; Bashford, J.; McCallum, H. and Jones, M. 2009 Contact networks in a wild Tasmanian devil (*Sarcophilus harrisii*) population: using social network analysis to reveal seasonal variability in social behaviour and its implications for transmission of devil facial tumour disease. Ecology letters, 12, 1147-57.

Hanneman, R & Riddle, M. 2005 Introduction to social network methods. Riverside, CA: University of California, Riverside (http://faculty.ucr.edu/~hanneman/).

Harcourt, J.L.; Sweetman, G.; Johnstone, R.A. and Manica, A. 2009 Personality counts: the effect of boldness on shoal choice in three-spined sticklebacks. Animal Behaviour, 77, 1501-05.

Hoare, D.J.; Ruxton, G.D.; Godin, J-G.J. & Krause, J. 2000 The social organisation of free-ranging fish shoals. OIKOS, **89**, 546-54.

Hoelzel, A.R. 1993 Foraging behaviour and social group dynamics in Puget Sound killer whales. Animal Behaviour, 45, 581-591.

Hood, G.M. 2009 PopTools version 3.1.1.

Houde, A.E. 1988 The effects of female choice and male male competition on the mating success of male guppies. Animal Behaviour, **36**, 888-96.

Houde, A.E. 1997 Sex, color and mate choice in guppies, Monographs in behaviour and ecology, Princeton University Press, Princeton, N.J., USA.

Hubbell, S.P. and Johnson, L.K. 1987 Environmental variance in lifetime mating success, mate choice and sexual selection. The American Naturalist, **130**, 91-112.

Hughes, K., A.; Du, L. F.; Rodd, H. and Reznick, D.N. 1999 Familiarity leads to female mate preference for novel males in the guppy, *Poecilia reticulata*. Animal Behaviour, 58, 907-16.

Huntingford, F.A. 1976 The relationship between anti-predator behaviour and aggression among conspecifics in the three-spined stickleback, *Gasterosteus aculeatus*. Animal Behaviour, 24, 245-60.

Huntingford, F.A. 1982 Do inter- and intraspecific aggression vary in relation to predation pressure in sticklebacks? Animal Behaviour, 30, 909-916.

Huntingford, F.A. 1984 Some ethical issues raised by studies of predation and aggression. Animal Behaviour, **32**, 210-215.

Huntingford, F.A.; Metcalfe, M.B.; Thorpe, J.E.; Graham, W.D. and Adams, C.E. 1990 Social dominance and body size in Atlantic Salmon parr, *Salmo salar* L. Journal of fish biology, 36, 877-881.

James, R; Croft, D.P. & Krause, J. 2009 Potential banana skins in animal social network analysis. Behavioral Ecology Sociobiology, **63**, 989-997.

Jirotkul, M. 1999 Operational sex ratio influences female preference and male-male competition in guppies. Animal Behaviour, 58, 287-94.

Jirotkul, M. 2000 Male trait distribution determined alternative mating tactics in guppies. Journal of Fish Biology, 56, 1427-34.

Johnson, J.C. and Sih, A. 2005 Precopulatory sexual cannibalism in fishing spiders (Dolomedes triton): a role for behavioral syndromes. Behavioral Ecology Sociobiology, 58, 390-96.

Johnson, J. C. and Sih, A. 2007 Fear, food, sex and parental care: a syndrome of boldness in the fishing spider, *Dolomedes titon.* Animal Behaviour, 74, 1131-38.

Johnsson, J.I. and Bohlin, T. 2006 The cost of catching up: increased winter mortality following structural growth compensation in the wild. Proceedings of the Royal Society B, **273**, 1281-86.

Jormalainen, V.; Merilaita, S. and Riihimäki, J. 2001 Costs of intersexual conflict in the isopod Idotea baltica. Journal of Evolutionary Biology, **14**, 763-772.

Kagan, J., Reznick, J.S. and Snidman, N. 1988 Biological bases of childhood shyness. Science, **240**, 167-171.

Kasper, C. and Voelkl, B. 2009 A social network analysis of primate groups. Primates, **50**, 343-56.

Kelley, J.L.; Graves, J.A and Magurran, A.E. 1999 Familiarity breeds contempt in guppies, Nature, **401**, 661-62.

Kelley, J.L. and Magurran, A.E. 2003 Effects of relaxed predation pressure on visual predator recognition in the guppy. Behavioural Ecology and Sociobiology, **54**, 225-32.

Koolhaas, J.M.; Korte, S.M.; de Boer, S.F.; van der Vegt, B.J.; van Reenan, C.G.; Hopster, H. de Jong, I.C.; Ruis, M.A.W. and Blokhuis, H.J. 1999 Coping styles in animals: current status in behavior and stress-physiology. Neuroscience and Biobehavioral Reviews, **23**, 925-35.

Koolhaas, J.M.; de Boer, S.F.; Buwalda, B.; van der Vegt, B.J.; Carere, C. and Groothuis, A.G.G. 2001 How and why coping systems vary amongst individuals in Broom, D.M. "Coping with

challenge: Welfare in animals including humans", Dahlem University Press.

Krams, I.; Berzins, A.; Krama, T.; Wheatcroft, D.; Igaune, K and Rantala, M.J. 2010 The increased risk of predation enhances cooperation. Proceedings of the Royal Society B, **277**, 513-18.

Krause, J. and Ruxton, G.D. 2002 Living in groups. Oxford University Press, Oxford.

Krause, J. ;Godin, J-G. J. and Brown, D. 1996 Phenotypic variability within and between fish shoals. Ecology, **77**, 1586-91.

Krause, J.; Ruxton, G.D. and Godin, J-G. J. 1999 Distribution of Crassiphiala bulboglossa, a parasitic worm, in shoaling fish. Journal of Animal Ecology, **68**, 27-33.

Krause, J.; Croft, D.P. and James, R. 2007 Social network theory in the behavioural sciences: potential applications, Behavioral Ecology Sociobiology, **62**, 15-27.

Krause, J.; Lusseau, D. and James, R. 2009 Animal social networks: an introduction. Behavioral Ecology Sociobiology, **63**, 967-73.

Krause J.; Wilson A. and Croft D.P. 2011 New technology facilitates study of social networks. Trends in Ecology and Evolution (in press).

Krebs, J.R. and Davies, N.B. 1993 An Introduction to Behavioural Ecology. Third Edition, Blackwell Publishing company, UK.

Lachlan, R.F.; Crooks, L. and Laland, K.N. 1998 Who follows whom? Shoaling preferences and social learning of foraging information in guppies. Animal Behaviour, 56, 181-190.

Lai, G and Wong, O. 2002 The tie effect on information dissemination: the spread of a commercial rumor in Hong Kong. Social Networks, 24, 49-75.

Laland, K.N. and Williams, K. 1997 Shoaling generates social learning of foraging information in guppies. Animal Behaviour, **53**, 1161-69.

Latora, V. and Marchiori, M. 2001 Efficient Behavior of small-world networks. Physical review letters, 87, 198701 (4).

Le Vin, A.L.; Mable, B.K. and Arnold, K.E. 2010 Kin recognition via phenotype matching in a cooperatively breeding cichlid, *Neolamprologus pulcher*. Animal Behaviour, **79**, 1109-14.

Lieberman, E.; Hauert, C. & Nowak, M.A. 2005 Evolutionary dynamics on graphs. Nature, **433**, 312-16.

Lima, S.L. and Bednekoff, P.A. 1999 Temporal variation in danger drives antipredator behaviour: the predation risk allocation hypothesis. American Naturalist, 153, 649-659.

Lindström, K. and Ranta, E. 1993 Foraging group structure among individuals differing in competitive ability. Annales Zoologici Fennici, 30, 225-232.

Liu, Y-K.; Li, Z.; Chen, X-J. and Wang, L. 2009 Prisoner's dilemma game on two types of positively correlated networks. Chinese Physics Letters, 26, 1-4.

Lusseau, D. 2003 The emergent properties of a dolphin social network. Proceedings of the Royal Society B (Suppl.), **270**, S186-88.

Lusseau, D. 2007 Evidence for social role in a dolphin social network. Evolutionary Ecology, **21**, 357-66.

Lusseau, D.; Whitehead, H & Gero, S. 2008 Incorporating uncertainty into the study of animal social networks. Animal Behaviour, **75**, 1809-15.

Madden, J.R.; Drewe, J.A.; Pearce, G.P. and Clutton-Brock, T.H. 2009 The social network struture of a wild meerkat population: 2. Intragroup interactions. Behavioral Ecology Sociobiology, **64**, 81-95.

Magellan, K. and Magurran, A.E. 2006 Habitat use mediates the conflict of interest between the sexes. Animal Behaviour, **72**, 75-81.

Magnhagen, C. and Staffan, F. 2003 Social learning in young-of-the-year perch encountering a novel food type. Journal of fish biology, **63**, 824-29.

Magnhagen, C. and Staffan, F. 2005 Is boldness affected by group composition in young-of-the-year perch (*Perca fluviatilis*)? Behavioral Ecology Sociobiology, **57**, 295-303.

Magurran, A.E. 2005 Evolutionary Ecology. The Trinidadian guppy. Oxford University Press, Oxford, UK

Magurran, A.E. and Nowak, M. 1991 Another battle of the sexes: the consequences of sexual asymmetry in mating costs and predation risk in the guppy, *Poecilia reticulata*, Proceedings of the Royal Society B, **246**, 31.38.

Magurran, A.E. and Seghers, B.H. 1990a Population differences in predator recognition and attack cone avoidance in the guppy *Poecilia reticulata*. Animal Behaviour, **40**, 443-52.

Magurran, A.E. and Seghers, B.H. 1990b Risk sensitive courtship in the guppy (*Poecilia reticulata*). Behaviour, **112**, 194-201.

Magurran, A.E. and Seghers, B.H. 1994a Predator inspection behaviour covaries with schooling tendency amongst wild guppy, Poecilia reticulata, populations in Trinidad. Behaviour, **128**, 121-34.

Magurran, A.E. and Seghers, B. H. 1994b Sexual conflict as a consequence of ecology: evidence from guppy, *Poecilia reticulata*, populations in Trinidad, Proceedings of the Royal Society B, **255**, 31-36.

Malloy, T.E.; Barcelos, S.; Arruda, E.; De Rosa, M. and Fonseca, C. 2005 Individual differences and cross-situational consistency of dyadic social behaviour. Journal of Personality and Social Psychology, **89**, 643-654.

Mangel, M and Munch, S.B. 2005 A life-history perspective on short- and long-term consequences of compensatory growth. The American Naturalist, **166**, E155-76.

Marchetti, C. and Drent, P.J. 2000 Individual differences in the use of social information in foraging by captive great tits, Animal Behaviour, **60**, 131-40.

Matocq, M.D. & Lacey, E.A. 2004 Philopatry, kin clusters and genetic relatedness in a population of woodrats (*Neotoma macrotis*). Behavioral Ecology, **15**, 647-53.

Maynard-Smith, J. 1982 Evolution and the theory of games. Cambridge University Press, Cambridge.

McComb, K.; Moss, C.; Durant, S.M.; Baker, L. and Sayialel, S. 2001 Matriarchs as Repositories of Social Knowledge in African Elephants. Science, **292**, 491-4.

McElreath, R. and Strimling, P. 2006 How noisy information and individual asymmetries can make "personality" an adaptation: a simple model. Animal Behaviour, **72**, 1135-39.

McNamara, J.M.; Barta, Z and Houston, A.I. 2004 Variation in behaviour promotes cooperation in the Prisoner's Dilemma game. Nature, **428**, 745-48.

McNamara, J.M. and Leimar, O. 2010 Variation and the response to variation as a basis for successful cooperation. Philosophical Transactions of the Royal Society London B, **365**, 2627-2633.

McPherson, M.; Smith-Lovin, L. and Cook, J.M. 2001 Birds of a feather: Homophily in social networks. Annual Review of Sociology, **27**, 415-44.

Metcalfe, N.B. and Thorpe, J.E. 1992 Early predictors of life-history events: the link between first feeding date, dominance and seaward migration in Atlantic salmon, *Salmo salar* L., Journal of Fish Biology, **41**, 93-99.

Metcalfe, N.B. and Thomson, B.C. 1995 Fish recognise and prefer to shoal with poor competitors, Proceedings of the Royal Society B, **259**, 207-10.

Milinski, M. 1979 An evolutionary stable feeding strategy in sticklebacks. Zeitschrift fur Tierpsychologie – Journal of Comparative Ethology, **51**, 36-40.

Milinski, M. 1990 Tit for Tat: sticklebacks (Gasterosteus aculeatus) "trusting" a cooperating partner. Behavioral Ecology, **1**, 7-12.

Morrell, L. J.; Croft, D.P., Dyer, J.R.; Chapman, B.B.; Kelly, J.L.; Laland, K.N. & Krause, J. 2008 Association patterns and foraging behaviour in natural and artificial guppy shoals. Animal Behaviour, **76**, 855-864.

Morris, S.B and DeShon, R.P. 2002 Combining effect size estimates in Meta-Analysis with repeated measures and independent-groups design. Psychological methods, **7**, 105-25.

Mühlhaüser, C. and Blanckenhorn, W.U. 2002 The costs of avoiding matings in the dung fly *Sepsis cynipsea*. Behavioral Ecology, **13**, 359-65.

Murphy, K.E. and Pitcher, T.J. 1997 Predator attack motivation influences the inspection behaviour of European minnows. Journal of Fish Biology, **50**, 407-17.

Nakagawa, S. and Cuthill, I.C. 2007 Effect size, confidence interval and statistical significance: a practical guide for biologists. Biological Reviews, **82**, 591-605.

Neat, F.C; Taylor, A.C. and Huntingford, F.A. 1998 Proximate costs of fighting in amle cichlid fish: the role of injuries and energy metabolism. Animal Behaviour, **55**, 875-82.

Newman, M.E.J. 2001 Scientific collaboration networks. II. Shortest paths, weighted networks and centrality. Physical Review E, **64**, 1-7.

Newman, M.E.J., 2002 Assortative mixing in networks. Physical Review letters, **89**.

Newman, M.E.J., 2003 Properties of highly clustered networks Physical Review E, **68**, article - 026121.

Nomakuchi, S; Park, P.J. and Bell, M.A. (2009) Correlation between exploration activity and use of social information in three-spined sticklebacks. Behavioral Ecology, **20**, 340-45.

Nowak, M.A. & May, R.M. 1992 Evolutionary games and spatial chaos. Nature, **359**, 826-9.

Ohtsuki, H.; Hauert, C. Lieberman, E and Nowak, M.A. 2006 A simple rule for the evolution of cooperation on graphs and social networks, Nature, **441**, 502-5.

Parker, G.A. 1983 Mate quality and mating decisions, **in** Mate Choice, ed Bateson, P., Cambridge University Press, Cambridge, UK.

Périquet, S.; Valeix, M.; Loveridge, A.J.; Madzikanda, H.; Macdonald, D.W. and Fritz, H. 2010 Individual vigilance of African herbivores while drinking: the role of immediate predation risk and context. Animal Behaviour, **79**, 665-71.

Pike, T.W.; Samanta, M; Linström and Royle, N.J. 2008 Behavioural phenotype affects social interactions in an animal network. Proceedings of the Royal Society B, **275**, 2515-2520.

Pilastro, A.; Benetton, S. and Bisazza, A. 2003 Female aggregation and male competition reduce costs of sexual harassment in the mosquitofish *Gambusia holbrooki*. Animal Behaviour, 65, 1161-1167.

Pitcher, T.J. and Hart P. J.B. 1982 Fisheries Ecology. Croom Helm, London.

Pitcher, T.J. and Parrish, J.K. 1993 Functions of shoaling behaviour in teleosts. in Behaviour of teleost fishes, 2nd Ed. (Editor: Pitcher, T.J.) pp 363-439. Chapman and Hall, London.

Pitcher, T.J.; Magurran, A.E. and Winfield, I.J. 1982 Fish in larger shoals find food faster. Behavioral Ecology Sociobiology, **10**, 149-51.

Pitcher, T.J.; Magurran, A.E. and Allan, J.R. 1983 Shifts of behaviour with shoal size in cyprinids. Proceedings of the third British freshwater fisheries conference, **3**, 220-221.

Pocklington, R. & Dill, L. 1995 Predation on females or males: who pays for bright male traits? Animal Behaviour, **49**, 1122–1124.

Ranta, E; Rita, H. and Lindström, K. 1993 Competition versus cooperation – success of individuals foraging alone and in groups. American Naturalist, **142**, 42-58.

Réale, D. and Festa-Bianchet, M. 2003 Predator-induced natural selection on temperament in bighorn ewes, Animal behaviour, **65**, 463-70.

Reichard, M.; Jurajda, P.; Šimková, A. and Matějusová, I. 2002 Size-related habitat use by bitterling (*Rhodeus sericeus*) in a regulated lowland river. Ecology of Freshwater Fish, **11**, 112-122.

Reichert, S.E. and Hedrick, A.V. 1993 A test for correlations among fitness-linked behavioural traits in the spider *Agelenopsis aperta* (Araneae, Agelenidae). Animal Behaviour, **46**, 669-675.

Reznick D.N. and Endler, J.A. 1982 The Impact of Predation on Life History Evolution in Trinidadian Guppies (Poecilia reticulata). Evolution, **36**, 160-77.

Reznick, D.N.; Bryant, M.J.; Roff, D.; Ghalambor, C.K. and Ghalambor, D.E. 2004 Effect of extrinsic mortality on the evolution of senescence in guppies. Nature, **431**, 1095-99.

Robins, G.; Pattison, P.; Kalish, Y. & Lusher, D. 2007 An introduction to exponential random graph (p*) models for social networks. Social Networks, **29**, 173-91.

Rong, Z. and Wu, Z-X. 2009 Effect of the degree correlation in public goods game on scale-free networks. Europhysics Letters, **87**, article 30001.

Royle, N.J; Schuett, W. and Dall, S.R.X. 2010 Behavioral consistency and the resolution of sexual conflict over parental investment. Behavioral Ecology, **21**, 1125-30.

Saavedra, S.; Reed-Tsochas, F. and Uzzi, B. 2009 A simple model of bipartite cooperation for ecological and organizational networks. Nature, **457**, 463-66.

Sanchez, P.; Ambrosio, P.P. and Flos, R. 2010 Stocking density and sex influence individual growth of Senegalese sole (*Solea senegalensis*). Aquaculture, **300**, 93-101.

Santos, F.C.; Pacheco, J.M. and Lenaerts, T. 2006a Cooperation prevails when individuals adjust their social ties. Plos Computational Biology, vol. 2, pg 1284-1291.

Santos, F.C.; Pacheco, J.M. and Lenaerts, T 2006b Evolutionary dynamics of social dilemmas in structured heterogeneous populations. Proceedings of the National Academy of Sciences of the United States of America, **103**, 3490-94.

Schmaltz, G.; Quinn, J.S and Lentz, C. 2008 Competition and waste in the communally breeding smooth-billed ani: effects of group size on egg-laying behaviour. Animal Behaviour, **76,** 153-62

Schuett, W.; Tregenza, T. and Dall, S.R.X. 2009 Sexual selection and animal personality. Biological Reviews, **85**, 217-46.

Seghers, B.H. 1974 Schooling behaviour in the guppy (*Poecilia reticulata*): an evolutionary response to predation. Evolution, **28**, 486-489.

Selman, J. and Goss-Custard, J.D. 1988 Interference between foraging redshank *Tringa totanus*. Animal Behaviour, **36**, 1542-1544.

Sen, P; Dasgupta, S.; Chatterjee, A.; Sreeram, P.A.; Mukherjee, G. and Manna, S.S. 2002 Small-world properties of the Indian Railway network. Physical Review, **67**, 1-5.

Sih, A.; Kats, L.B. and Maurer, E.F. 2003 Behavioural correlations across situations and the evolution of anti-predator behaviour in a sunfish-salamander system. Animal Behaviour, vol. **63**, pg 29-44.

Sih, A.; Bell, A.M.; Johnson, J.C. and Ziemba, R.E. 2004 Behavioural syndromes: an integrative overview. Quarterly review of biology, **79**, 241-277.

Sih, A. and Watters, J.V. 2005 The mix matters: behavioural types and group dynamics in water striders. Behaviour, **142**, 1417-1431.

Sih, A.; Hanser, S.F. & McHugh, K.A. 2009 Social network theory: new insights and issues for behavioural ecologists. Behavioral Ecology Sociobiology, **63**, 975-88.

Simcox, H.; Colegrave, N; Heenan, A.; Howard, C and Braithwaite, V.A. 2005 Context-dependent male mating preferences for unfamiliar females. Animal Behaviour, **70**, 1429-37.

Sinclair, A.R.E. 1977 The African Buffalo. A study of resource limitation of populations. Wildlife Behaviour and Ecology Series, University of Chicago Press, Chicago.

Sinn, D.L.; Apiolaza, L.A. and Moltschaniwskyj, N.A. 2006 Heritability and fitness-related consequences of squid personality traits. Journal of Evolutionary Biology, **19**, 1437-1447.

Smith, C.C. and Sargent, R.C. 2006 Female fitness declines with increasing female densitybut not male harassment in the western mosquitofish, *Gambusia affinis*. Animal behaviour, **71**, 401-07.

Smith, B.R. and Blumstein, D.T. 2010 Behavioral types as predictors of survival in Trinidadian guppies (Poecilia reticulata). Behavioral Ecology, **21**, 919-26.

SPSS for Windows, Rel. 14.0.0. 2005 Chicago: SPSS Inc.

Sokal, R.R and Rohlf, F.J. 1995 Biometry. The principles and practice of statistics in biological research. W.H. Freeman and Company, New York, Third Ed.

Sokolowski, M.B.; Pereira H.S. and Hughes, K. 1997 Evolution of foraging behavior in Drosophila by density-dependent selection. Proceedings of the National Academy of Sciences of the United states of America, **94**, 7373-77.

Stamps, J.A. 2007 Growth-mortality trade-offs and "personality traits" in animals. Ecology letters, **10**, 355-363.

Stearns, S.C. and Hoekstra, R.F. 2005 Evolution: an introduction, 2nd Edition, Oxford University Press, Oxford, UK.

Stoehr, A.M. 1999 Are significance thresholds appropriate for the study of animal behaviour? Animal Behaviour, **57**, F22-25.

Sumner, I.T.; Travis, J. and Johnson, C.D. 1994 Methods of female fertility advertisement and variation among males in responsiveness in the sailfin molly (*Poecilia latipinna*). *Copeia*, 1994, 27-34.

Thomas, P.O.R.; Croft, D.P.; Morrell, L.J.; Davis, A.; Faria, J.J.; Dyer, J.R.G.; Piyapong, C.; Ramnarine, I.; Ruxton, G.D. & Krause, J. 2008 Does defection during predator inspection affect social structure in wild shoals of guppies? Animal Behaviour, **75**, 43-53.

Treherne, J.E. and Foster, W.A. 1982 Group size and anti-predator strategies in a marine insect. Animal Behaviour, **32**, 536-42.

Trivers, R.L. 1971 The evolution of reciprocal altruism. The Quarterly Review of Biology, **46**, 35-57.

Utne-Palm, A.C. and Hart, P.J.B. 2000 the effects of familiarity on competitive interactions between threespined sticklebacks, OIKOS, **91**, 225-32.

Valero, A.; Macías Garcia, C. and Magurran, A.E. 2008 Heterospecific harassment of native endangered fishes by invasive guppies in Mexico. Biology Letters, **4**, 149-152.

Veenema, A.H.; Sijtsma, B; Koolhaas, J.M. and de Kloet, E.R. 2005 The stress response to sensory contact in mice: genotype effect of the stimulus animal. Psychoneuroendocrinology, **30**, 550-57.

Verbeek, M.E.M.; Drent, P.J. and Wiepkema, P.R. 1994 Consistent individual differences in early exploratory behaviour of male great tits. Animal Behaviour, **48**, 113-1121.

Verbeek, M.E.M.; de Goede, P.; Drent, P.J. and Wiepkema, P.R. 1999 Individual behavioural characteristics and dominance in aviary groups of great tits. Behaviour, **136**, 23-48.

Voelkl, B. and Noë, R. 2008 The influence of social structure on the propagation of social information in artificial primate groups: A graph-based simulation approach. Journal of Theoretical Biology, **252**, 77-86.

Voelkl, B. and Noë, R. 2010 Simulation of information propagation in real-life primate networks: longevity, fecundity, fidelity. Behavioral Ecology and Sociobiology, **64**, 1449-59.

Ward, A.J.W and Hart, P.J.B. 2003 The effects of kin and familiarity on interactions between fish. Fish and Fisheries, **4**, 348-358.

Ward, A.J.W. and Krause, J. 2001 Body length assortative shoaling in the European minnow, *Phoxinus phoxinus*. Animal Behaviour, **62**, 617-21.

Ward, A.J.W.; Botham, M.S., Hoare, D.J.; James, R.; Broom, M.; Godin, J.G.J. & Krause, J 2002 Association patterns and shoal fidelity in the three-spined stickleback. Proceedings of the Royal Society B, **269**, 2451-2455.

Ward, A.J.W.; Axford, S. and Krause, J. 2003 Cross-species familiarity in shoaling fishes, Proceedings of the Royal Society B, **270**, 1157-61.

Ward, A.J.W.; Hart, P.J.B. and Krause, J. 2004a The effects of habitat- and diet-based cues on association preferences in three-spined sticklebacks. Behavioral Ecology, **15**, 925-29.

Ward, A.J.W.; Hart, P.J.B. and Krause, J. 2004b Assessment and assortment: how fishes use local and global cues to choose which school to go to. Proceedings of the Royal Society B, **271**, S328-30.

Ward, A.J.W.; Thomas, P.; Hart, P.J.B. and Krause, J. 2004c Correlates of boldness in three-spined sticklebacks (Gasterosteus aculeatus), Behavioral Ecology Sociobiology, **55**, 561-68.

Ward, A.J.W.; Webster, M.M. and Hart, P.J.B. 2006 Intraspecific food competition in fishes. Fish and Fisheries, **7**, 231-61.

Ward, A.J.W.; Webster, M.M. and Hart, P.J.B. 2007 Social recognition in wild fish populations. Proceedings of the Royal Society B, **274**, 1071-77.

Ward, A.J.W.; Webster, M.M.; Magurran, A.E.; Currie, S. and Krause, J. 2009 Species and population differences in social recognition between fishes: a role for ecology? Behavioral Ecology, **20**, 511-16.

Watts, D.J. and Strogatz, S.H. 1998 Collective dynamics of 'small-world' networks, Nature Letters, 393, 440-442.

Weatherley, A.H. and Gill, H.S. 1987 The biology of fish growth. Academic Press Inc., London, U.K.

Webster, M.M.; Goldsmith, J.; Ward, A.J.W. and Hart, P.J.B. 2007 Habitat-specific chemical cues influence association preferences and shoal cohesion in fish. Behavioral Ecology Sociobiology, 62, 273-80.

Wells, K.D. 2007 The ecology and behavior of amphibians. The University of Chicago Press, Chicago, USA.

Wey, T.; Blumstein, D.T.; Shen, W. & Jordan, F. 2008 Social network analysis of animal behaviour: a promising tool for the study of sociality. Animal Behaviour, **75**, 333-44.

Whitehead, H. 1999 Testing association patterns of social animals. Animal Behaviour, **57**, F26-9.

Whitehead, H. 2003 Sperm Whales. Social evolution in the ocean. University of Chicago Press, Chicago, USA.

Whitehead, H. 2004 The group strikes back: follow protocols for behavioural research on Cetaceans. Marine Mammal Science (Letters), **20**, 664-70.

Whitehead, H. 2007 SOCPROG2.3 (for MATLAB7.4).

Whitehead, H. 2008 Analyzing animal societies. Quantitative methods for vertebrate social analysis. University of Chicago Press, ltd., London.

Whitehead, H. and Dufault, S. 1999 Techniques for analyzing vertebrate social structure using identified individuals: review and recommendations. Advances in the study of behavior, **28**, 33-74.

Wilkinson, L. and task force on statistical inference 1999 Statistical methods in psychology journals. American Psychologist, **54**, 594-604.

Williams, R. and Lusseau, D. 2006 A killer whale social network is vulnerable to targeted removals. Biology Letters, **2**, 497-500.

Wilson, D.S. 1998 Adaptive individual differences within single populations. Philosophical Transactions of the Royal Society B-Biological Sciences, vol. **353**, pg 199-205.

Wilson, D.S.; Coleman, K.; Clark, A.B. and Biederman, L. 1993 Shy-bold continuum in pumpkinseed sunfish (*Lepomis gibbosus*): An ecological study of a psychological trait. Journal of comparative psychology, **107**, 250-60.

Wisniewski, J.; Allen, S.J. and Möller, L.M. 2009 Social cohesion in a hierarchically structured embayment population of Indo-Pacific bottlenose dolphins. Animal Behaviour, **77**, 1449-57.

Wolf, J.B.W & Trillmich, F. 2008 Kin in space: social viscosity in a spatially and genetically substructured network. Proceedings of the Royal Society B, **275**, 2063-69.

Wolf, J.B.W; Mawdsley, D.; Trillmich, F. and James, R. 2007 Social structure in a colonial mammal: unravelling hidden structural layers and their foundations by network analysis. Animal Behaviour, **74**, 1293-1302.

Wolf, M.; van Doorn, G.S.; Leimar, O. and Weissing, F.J. 2007 Life-history trade-offs favour the evolution of animal personalities. Nature, 447, 581-85.

Wrona, F.J. and Dixon R.W.J. 1991 Group size and predation risk: a field analysis of encounter and dilution effects. The American Naturalist, 137, 186-201.

Zar, J.H. 1999 Biostatistical analyses, Prentice Hall, Upper Saddle River, NJ.